S3 Family 8-Bit Microcontrollers

S3F80Q5 MCU

Product Specification

PS030902-0115

P R E L I M I N A R Y

Copyright ©2015 Zilog®, Inc. All rights reserved.
www.zilog.com

Warning: DO NOT USE THIS PRODUCT IN LIFE SUPPORT SYSTEMS.

LIFE SUPPORT POLICY

ZILOG'S PRODUCTS ARE NOT AUTHORIZED FOR USE AS CRITICAL COMPONENTS IN LIFE SUPPORT DEVICES OR SYSTEMS WITHOUT THE EXPRESS PRIOR WRITTEN APPROVAL OF THE PRESIDENT AND GENERAL COUNSEL OF ZILOG CORPORATION.

As used herein

Life support devices or systems are devices which (a) are intended for surgical implant into the body, or (b) support or sustain life and whose failure to perform when properly used in accordance with instructions for use provided in the labeling can be reasonably expected to result in a significant injury to the user. A critical component is any component in a life support device or system whose failure to perform can be reasonably expected to cause the failure of the life support device or system or to affect its safety or effectiveness.

Document Disclaimer

©2015 Zilog, Inc. All rights reserved. Information in this publication concerning the devices, applications, or technology described is intended to suggest possible uses and may be superseded. ZILOG, INC. DOES NOT ASSUME LIABILITY FOR OR PROVIDE A REPRESENTATION OF ACCURACY OF THE INFORMATION, DEVICES, OR TECHNOLOGY DESCRIBED IN THIS DOCUMENT. ZILOG ALSO DOES NOT ASSUME LIABILITY FOR INTELLECTUAL PROPERTY INFRINGEMENT RELATED IN ANY MANNER TO USE OF INFORMATION, DEVICES, OR TECHNOLOGY DESCRIBED HEREIN OR OTHERWISE. The information contained within this document has been verified according to the general principles of electrical and mechanical engineering.

S3 and Z8 are trademarks or registered trademarks of Zilog, Inc. All other product or service names are the property of their respective owners.

Revision History

Each instance in this document's revision history reflects a change from its previous edition. For more details, refer to the corresponding page(s) or appropriate links furnished in the table below.

Date	Revision Level	Description	Page
Jan 2015	02	Updated the Third Parties for Development Tools section.	21-7
Mar 2014	01	Original Zilog issue. Corrected pin circuit diagrams, Figures 1-3 through 1-8; added "H" hex valuator consistent to industry standards, Table 2-2; corrected hex address of FRT Control Register from FEH to FCH; changed "First interrupt" to "Fast interrupt", Figure 6-1; replaced "seven" with "three", deleted "(bit 6 is not used for the S3F80P5)" in Note 1, P3CON Register; corrected superscript/exponent issue, DIV instruction; deleted "bit [7]" from SED &R bullet.	1-8 4-4, 4-13 4-29 6-5 6-37 8-1
Aug 2013	1.10	First release.	
Mar 2013	1.00	Second draft.	
Dec 2011	0.00	Preliminary spec for internal release only.	

Chip Handling Guide

Precaution Against Electrostatic Discharge

When handling semiconductor devices, be sure that the environment is protected against static electricity.

1. Operators should wear anti-static clothing and use earth band.
2. All objects that come in direct contact with devices should be made of materials that do not produce static electricity that would cause damage.
3. Equipment and work table must be earthed.
4. Ionizer is recommended to remove electron charge.

Contamination

Be sure to use semiconductor products in the environment that may not be exposed to dust or dirt adhesion.

Temperature/Humidity

Semiconductor devices are sensitive to environment temperature and humidity. High temperature or humidity may deteriorate semiconductor device's characteristics. Therefore avoid storage or use in such conditions.

Mechanical Shock

Care should be exercised not to apply excessive mechanical shock or force on semiconductor device.

Chemical

Do not expose semiconductor device to chemical because reaction to chemical may cause deterioration of device characteristics.

Light Protection

In case of non-EMC (Epoxy Molding Compound) package, do not expose semiconductor IC to strong light. It may cause device's malfunction. (But, some special products which utilize the light or have security function are excepted from this guide)

Radioactive, Cosmic and X-ray

Semiconductor devices can be influenced by radioactive, cosmic ray or X-ray. Radioactive, cosmic and X-ray may cause soft error during device operation. Therefore semiconductor devices must be shielded under environment that may be exposed to radioactive, cosmic ray or X-ray.

EMS (Electromagnetic Susceptibility)

Note that semiconductor device's characteristics may be affected by strong electromagnetic wave or magnetic field during operation under insufficient PCB circuit design for EMS.

Table of Contents

Chip Handling Guide iv

List of Figures xi

List of Tables xiv

List of Examples xvi

1 Product Overview 1-1

1.1 S3C8/S3F8-Series Microcontrollers 1-1
1.2 S3F80Q5 Microcontroller 1-2
1.3 Features 1-3
1.4 Block Diagram 1-5
1.4.1 24-Pin Package 1-5
1.5 Pin Assignments 1-6
1.6 Pin Circuits 1-8

2 Address Space 2-1

2.1 Overview 2-1
2.2 Program Memory 2-2
2.2.1 Smart Option 2-3
2.3 Register Architecture 2-5
2.3.1 Register Page Pointer (PP) 2-7
2.3.2 Register Set 1 2-8
2.3.3 Register Set 2 2-8
2.3.4 Prime Register Space 2-9
2.3.5 Working Registers 2-10
2.3.6 Using the Register Pointers 2-11
2.4 Register Addressing 2-13
2.4.1 Common Working Register Area (C0H-CFH) 2-15
2.4.2 4-bit Working Register Addressing 2-17
2.4.3 8-bit Working Register Addressing 2-19
2.5 System and User Stacks 2-21
2.5.1 Stack Operations 2-21

3 Addressing Modes 3-1

3.1 Overview 3-1
3.1.1 Register Addressing Mode (R) 3-2
3.1.2 Indirect Register Addressing Mode (IR) 3-3
3.1.3 Indexed Addressing Mode (X) 3-7
3.1.4 Direct Address Mode (DA) 3-10
3.1.5 Indirect Address Mode (IA) 3-12
3.1.6 Relative Address Mode (RA) 3-13
3.1.7 Immediate Mode (IM) 3-14

4 Control Registers 4-1

4.1 Overview 4-1
4.2 Register Map Summary 4-2
4.2.1 BTCON: Basic Timer Control Register (D3H, Set1, Bank0) 4-6

4.2.2 CACON: Counter A Control Register (F3H, Set1, Bank0) 4-7
4.2.3 CLKCON: System Clock Control Register (D4H, Set1, Bank0) 4-8
4.2.4 EMT: External Memory Timing Register (NOTE) (FEH, Set1, Bank0) 4-9
4.2.5 FLAGS: System Flags Register (D5H, Set1, Bank0) 4-10
4.2.6 FMCON: Flash Memory Control Register (EFH, Set1, Bank1) 4-11
4.2.7 FMSECH: Flash Memory Sector Address Register (High Byte) (ECH, Set1, Bank1) 4-12
4.2.8 FMSECL: Flash Memory Sector Address Register (Low Byte) (EDH, Set1, Bank1) 4-12
4.2.9 FMUSR: Flash Memory User Programming Enable Register (EEH, Set1, Bank1) 4-12
4.2.10 FRTCON: FRT Control Register (FCH, Set1, Bank1) 4-13
4.2.11 IMR: Interrupt Mask Register (DDH, Set1, Bank0) 4-14
4.2.12 IPH: Instruction Pointer (High Byte) (DAH, Set1, Bank0) 4-15
4.2.13 IPL: Instruction Pointer (Low Byte) (DBH, Set1, Bank0) 4-15
4.2.14 IPR: Interrupt Priority Register (FFH, Set1, Bank0) 4-16
4.2.15 IRQ: Interrupt Request Register (DCH, Set1, Bank0) 4-17
4.2.16 LVDCON: LVD Control Register (E0H, Set1, Bank1) 4-18
4.2.17 LVDSEL: LVD Flag Level Selection Register (F1H, Set1, Bank1 4-18
4.2.18 P0CONH: Port 0 Control Register (High Byte) (E8H, Set1, Bank0) 4-19
4.2.19 P0CONL: Port 0 Control Register (Low Byte) (E9H, Set1, Bank0) 4-20
4.2.20 P0INT: Port 0 External Interrupt Enable Register (F1H, Set1, Bank0) 4-21
4.2.21 P0PND: Port 0 External Interrupt Pending Register (F2H, Set1, Bank0) 4-22
4.2.22 P0PUR: Port 0 Pull-up Resistor Enable Register (E7H, Set1, Bank0) 4-23
4.2.23 P1CONH: Port 1 Control Register (High Byte) (EAH, Set1, Bank0) 4-24
4.2.24 P1CONL: Port 1 Control Register (Low Byte) (EBH, Set1, Bank0) 4-25
4.2.25 P1OUTPU: Port 1 Output Pull-Up Resistor Enable Register (F2H, Set1, Bank1) 4-26
4.2.26 P2CONL: Port 2 Control Register (Low Byte) (EDH, Set1, Bank0) 4-27
4.2.27 P2INT: Port 2 External Interrupt Enable Register (E5H, Set1, Bank0) 4-27
4.2.28 P2OUTMD: Port 2 Output Mode Selection Register (F3H, Set1, Bank1) 4-27
4.2.29 P2PND: Port 2 External Interrupt Pending Register (E6H, Set1, Bank0) 4-28
4.2.30 P2PUR: Port 2 Pull-Up Resistor Enable Register (EEH, Set1, Bank0) 4-28
4.2.31 P3CON: Port 3 Control Register (EFH, Set1, Bank0) 4-29
4.2.32 P3OUTPU: Port 3 Output Pull-Up Resistor Enable Register (F4H, Set1, Bank1) 4-31
4.2.33 PP: Register Page Pointer (DFH, Set1, Bank0) 4-32
4.2.34 RESETID: Reset Source Indicating Register (F0H, Set1, Bank1) 4-33
4.2.35 RP0: Register Pointer 0 (D6H, Set1, Bank0) 4-34
4.2.36 RP1: Register Pointer 1 (D7H, Set1, Bank0) 4-34
4.2.37 SPL: Stack Pointer (Low Byte) (D9H, Set1, Bank0) 4-35
4.2.38 SPICON: SPI Control Register (E9H, Set1, Bank1) 4-36
4.2.39 SPISTAT: SPI Status Register (EAH, Set1, Bank1) 4-37
4.2.40 STOPCON: Stop Control Register (FBH, Set1, Bank0) 4-38
4.2.41 SYM: System Mode Register (DEH, Set1, Bank0) 4-39
4.2.42 T0CON: Timer 0 Control Register (D2H, Set 1, Bank0) 4-40
4.2.43 T1CON: Timer 1 Control Register (FAH, Set1, Bank0) 4-41
4.2.44 T2CON: Timer 2 Control Register (E8H, Set1, Bank1) 4-42

5 Interrupt Structure 5-1

5.1 Overview 5-1
5.1.1 Levels 5-1
5.1.2 Vectors 5-1
5.1.3 Sources 5-1
5.1.4 Interrupt Types 5-2
5.1.5 Interrupt Vector Addresses 5-4
5.1.6 Enable/Disable Interrupt Instructions (EI, DI) 5-6
5.1.7 Interrupt Processing Control Points 5-7
5.1.8 Peripheral Interrupt Control Registers 5-8
5.1.9 System Mode Register (SYM) 5-9
5.1.10 Interrupt Mask Register (IMR) 5-10
5.1.11 Interrupt Priority Register (IPR) 5-11

5.1.12 Interrupt Request Register (IRQ) 5-13
5.1.13 Interrupt Pending Function Types 5-14
5.1.14 Interrupt Source Polling Sequence 5-15
5.1.15 Interrupt Service Routines 5-15
5.1.16 Generating interrupt Vector Addresses 5-16
5.1.17 Nesting of Vectored Interrupts 5-16
5.1.18 Instruction Pointer (IP) 5-16
5.1.19 Fast Interrupt Processing 5-17

6 Instruction Set 6-1

6.1 Overview 6-1
6.1.1 Data Types 6-1
6.1.2 Register Addressing 6-1
6.1.3 Addressing Modes 6-2
6.2 Flags Register (FLAGS) 6-5
6.2.1 Flag Descriptions 6-6
6.2.2 Instruction Set Notation 6-7
6.2.3 Condition Codes 6-11
6.3 Instruction Descriptions 6-12
6.3.1 ADC-Add with Carry 6-13
6.3.2 ADD-Add 6-14
6.3.3 AND-Logical AND 6-15
6.3.4 BAND-Bit AND 6-16
6.3.5 BCP-Bit Compare 6-17
6.3.6 BITC-Bit Complement 6-18
6.3.7 BITR-Bit Reset 6-19
6.3.8 BITS-Bit Set 6-20
6.3.9 BOR-Bit OR 6-21
6.3.10 BTJRF-Bit Test, Jump Relative on False 6-22
6.3.11 BTJRT-Bit Test, Jump Relative on True 6-23
6.3.12 BXOR-Bit XOR 6-24
6.3.13 CALL-Call Procedure 6-25
6.3.14 CCF-Complement Carry Flag 6-26
6.3.15 CLR-Clear 6-27
6.3.16 COM-Complement 6-28
6.3.17 CP-Compare 6-29
6.3.18 CPIJE-Compare, Increment, and Jump on Equal 6-30
6.3.19 CPIJNE-Compare, Increment, and Jump on Non-Equal 6-31
6.3.20 DA-Decimal Adjust 6-32
6.3.21 DEC-Decrement 6-34
6.3.22 DECW-Decrement Word 6-35
6.3.23 DI-Disable Interrupts 6-36
6.3.24 DIV-Divide (Unsigned) 6-37
6.3.25 DJNZ-Decrement and Jump if Non-Zero 6-38
6.3.26 EI-Enable Interrupts 6-39
6.3.27 ENTER-Enter 6-40
6.3.28 EXIT-Exit 6-41
6.3.29 IDLE-Idle Operation 6-42
6.3.30 INC-Increment 6-43
6.3.31 INCW-Increment Word 6-44
6.3.32 IRET-Interrupt Return 6-45
6.3.33 JP-Jump 6-46
6.3.34 JR-Jump Relative 6-47
6.3.35 LD-Load 6-48
6.3.36 LDB-Load Bit 6-50
6.3.37 LDC/LDE-Load Memory 6-51
6.3.38 LDCD/LDED-Load Memory and Decrement 6-53

6.3.39 LDCI/LDEI-Load Memory and Increment....6-54
6.3.40 LDCPD/LDEPD-Load Memory with Pre-Decrement....6-55
6.3.41 LDCPI/LDEPI-Load Memory with Pre-Increment....6-56
6.3.42 LDW-Load Word....6-57
6.3.43 MULT-Multiply (Unsigned)....6-58
6.3.44 NEXT-Next....6-59
6.3.45 NOP-No Operation....6-60
6.3.46 OR-Logical OR....6-61
6.3.47 POP-Pop from Stack....6-62
6.3.48 POPUD-Pop User Stack (Decrementing)....6-63
6.3.49 POPUI-Pop User Stack (Incrementing)....6-64
6.3.50 PUSH-Push to Stack....6-65
6.3.51 PUSHUD-Push User Stack (Decrementing)....6-66
6.3.52 PUSHUI-Push User Stack (Incrementing)....6-67
6.3.53 RCF-Reset Carry Flag....6-68
6.3.54 RET-Return....6-69
6.3.55 RL-Rotate Left....6-70
6.3.56 RLC-Rotate Left Through Carry....6-71
6.3.57 RR-Rotate Right....6-72
6.3.58 RRC-Rotate Right through Carry....6-73
6.3.59 SB0-Select Bank 0....6-74
6.3.60 SB1-Select Bank 1....6-75
6.3.61 SBC-Subtract with Carry....6-76
6.3.62 SCF-Set Carry Flag....6-77
6.3.63 SRA-Shift Right Arithmetic....6-78
6.3.64 SRP/SRP0/SRP1-Set Register Pointer....6-79
6.3.65 STOP-Stop Operation....6-80
6.3.66 SUB-Subtract....6-81
6.3.67 SWAP-Swap Nibbles....6-82
6.3.68 TCM-Test Complement under Mask....6-83
6.3.69 TM-Test under Mask....6-84
6.3.70 WFI-Wait for Interrupt....6-85
6.3.71 XOR-Logical Exclusive OR....6-86

7 Clock and Power Circuits....7-1

7.1 Overview....7-1
7.1.1 System Clock Circuit....7-2
7.1.2 Clock Status during Power-Down Modes....7-3
7.1.3 System Clock Control Register (CLKCON)....7-4

8 RESET....8-1

8.1 Overview....8-1
8.1.1 Reset Sources....8-1
8.1.2 Reset Mechanism....8-4
8.1.3 Watch Dog Timer Reset....8-4
8.1.4 LVD Reset....8-4
8.1.5 Internal Power-On Reset....8-5
8.1.6 External Interrupt Reset....8-6
8.1.7 Stop Error Detection & Recovery....8-6
8.1.8 Power-Down Modes....8-7
8.1.9 Backup Mode....8-8
8.1.10 Stop Mode....8-10
8.1.11 Using an FRT Interrupt to Release Stop Mode....8-12
8.1.12 System Reset Operation....8-13
8.1.13 Hardware Reset Values....8-14
8.1.14 Recommendation for Unusued Pins....8-18

8.1.15 Summary Table of Backup Mode, Stop Mode, and Reset Status 8-19

9 I/O Ports 9-1

9.1 Overview 9-1
9.1.1 Port Data Registers 9-2
9.1.2 Pull-Up Resistor Enable Registers 9-3

10 Basic Timer and Timer 0 10-1

10.1 Overview 10-1
10.1.1 Basic Timer (BT) 10-1
10.1.2 Basic Timer Control Register (BTCON) 10-2
10.1.3 Basic Timer Function Description 10-3
10.1.4 Timer 0 Control Register (T0CON) 10-4
10.1.5 Timer 0 Function Description 10-6

11 Timer 1 11-1

11.1 Overview 11-1
11.1.1 Timer 1 Overflow Interrupt 11-2
11.1.2 Timer 1 Capture Interrupt 11-2
11.1.3 Timer 1 Match Interrupt 11-3
11.1.4 Timer 1 Control Register (T1CON) 11-5

12 Counter A 12-1

12.1 Overview 12-1
12.1.1 Counter A Control Register (CACON) 12-3
12.1.2 Counter A Pulse Width Calculations 12-4
12.1.3 To Generate 38 kHz, 1/3 Duty Signal through P3.1 12-6
12.1.4 To Generate a One-Pulse Signal through P3.1 12-7

13 Timer 2 13-1

13.1 Overview 13-1
13.1.1 Timer 2 Overflow Interrupt 13-2
13.1.2 Timer 2 Capture Interrupt 13-2
13.1.3 Timer 2 Match interrupt 13-3
13.1.4 Timer 2 Control Register (T2CON) 13-5

14 Embedded Flash Memory Interface 14-1

14.1 Overview 14-1
14.2 Flash ROM Configuration 14-1
14.3 User Program Mode 14-2
14.3.1 ISP™ (On-Board Programming) SECTOR 14-2
14.3.2 Smart Option 14-3
14.3.3 ISP Reset Vector and ISP Sector Size 14-5
14.4 Flash Memory Control Registers (User Program Mode) 14-6
14.4.1 Flash Memory Control Register (FMCON) 14-6
14.4.2 Flash Memory User Programming Enable Register (FMUSR) 14-6
14.4.3 Flash Memory sector Address Registers 14-7
14.4.4 Sector Erase 14-8
14.4.5 Programming 14-11
14.4.6 Reading 14-15
14.4.7 Hard Lock Protection 14-16

15 Low Voltage Detector 15-17

15.1 Overview 15-17
15.1.1 LVD 15-18

15.1.2 LVD FLAG 15-18
15.1.3 Low Voltage Detector Control Register (LVDCON) 15-20
15.1.4 Low Voltage Detector Flag Selection Register (LVDSEL) 15-20

16 SPI-Serial Peripheral Interface 16-1

16.1 Overview 16-1
16.1.1 Operation as an SPI Master 16-4
16.1.2 Master SCK Selection 16-4
16.1.3 Operation as an SPI Slave 16-4
16.1.4 SPI Status and Control 16-5
16.1.5 SPI Interrupt 16-5
16.1.6 SPI System Errors 16-6
16.1.7 SPI Control Register (SPICON) 16-7
16.1.8 SPI Status Register (SPISTAT) 16-8
16.1.9 SPI Data Register (SPIDATA) 16-9

17 FRT 17-1

17.1 Overview 17-1
17.1.1 FRT Match Interrupt 17-2
17.1.2 FRT Control Register (FRTCON) 17-3

18 Electrical Data 18-1

18.1 Overview 18-1
18.2 Absolute Maximum Ratings 18-2
18.3 D.C. Electrical Characteristics 18-3
18.4 A.C. Electrical Characteristics 18-8
18.5 Oscillation Characteristics 18-9

19 Mechanical Data 19-12

19.1 Overview 19-12

20 S3F80Q5 Flash MCU 20-1

20.1 Overview 20-1
20.2 Pin Assignment 20-2
20.2.1 Operating Mode Characteristics 20-3

21 Development Tools 21-1

21.1 Overview 21-1
21.1.1 Target Boards 21-1
21.1.2 Programming Socket Adapter 21-1
21.1.3 Development System Configuration 21-2
21.1.4 Third Parties for Development Tools 21-6
21.1.5 In-Circuit Emulators 21-6
21.1.6 OTP/MTP Programmers 21-6

List of Figures

Figure Number	Title	Page Number
Figure 1-1	Block Diagram (24-Pin)	1-5
Figure 1-2	Pin Assignment Diagram (24-Pin ELP Package)	1-6
Figure 1-3	Pin Circuit Type 1 (Port 0)	1-8
Figure 1-4	Pin Circuit Type 2 (Port 1.0-P1.3)	1-9
Figure 1-5	Pin Circuit Type 3 (Port 1.4-P1.7)	1-10
Figure 1-6	Pin Circuit Type 4 (Port 2)	1-11
Figure 1-7	Pin Circuit Type 5 (P3.0)	1-12
Figure 1-8	Pin Circuit Type 6 (P3.1)	1-13
Figure 2-1	Program Memory Address Space	2-2
Figure 2-2	Smart Option	2-3
Figure 2-3	Internal Register File Organization	2-6
Figure 2-4	Register Page Pointer (PP)	2-7
Figure 2-5	Set 1, Set 2, and Prime Area Register Map	2-9
Figure 2-6	8-byte Working Register Areas (Slices)	2-10
Figure 2-7	Contiguous 16-byte Working Register Block	2-11
Figure 2-8	Non-Contiguous 16-byte Working Register Block	2-12
Figure 2-9	16-bit Register Pair	2-13
Figure 2-10	Register File Addressing	2-14
Figure 2-11	Common Working Register Area	2-15
Figure 2-12	4-bit Working Register Addressing	2-18
Figure 2-13	4-bit Working Register Addressing Example	2-18
Figure 2-14	8-bit Working Register Addressing	2-19
Figure 2-15	8-bit Working Register Addressing Example	2-20
Figure 2-16	Stack Operations	2-21
Figure 3-1	Register Addressing	3-2
Figure 3-2	Working Register Addressing	3-2
Figure 3-3	Indirect Register Addressing to Register File	3-3
Figure 3-4	Indirect Register Addressing to Program Memory	3-4
Figure 3-5	Indirect Working Register Addressing to Register File	3-5
Figure 3-6	Indirect Working Register Addressing to Program or Data Memory	3-6
Figure 3-7	Indexed Addressing to Register File	3-7
Figure 3-8	Indexed Addressing to Program or Data Memory with Short Offset	3-8
Figure 3-9	Indexed Addressing to Program or Data Memory	3-9
Figure 3-10	Direct Addressing for Load Instructions	3-10
Figure 3-11	Direct Addressing for Call and Jump Instructions	3-11
Figure 3-12	Indirect Addressing	3-12
Figure 3-13	Relative Addressing	3-13
Figure 3-14	Immediate Addressing	3-14
Figure 4-1	Register Description Format	4-5
Figure 5-1	S3C8/S3F8-Series Interrupt Types	5-2
Figure 5-2	S3F80Q5 Interrupt Structure	5-3
Figure 5-3	ROM Vector Address Area	5-4

Figure 5-4 Interrupt Function Diagram 5-7
Figure 5-5 System Mode Register (SYM) 5-9
Figure 5-6 Interrupt Mask Register (IMR) 5-10
Figure 5-7 Interrupt Request Priority Groups 5-11
Figure 5-8 Interrupt Priority Register (IPR) 5-12
Figure 5-9 Interrupt Request Register (IRQ) 5-13

Figure 6-1 System Flags Register (FLAGS) 6-5

Figure 7-1 Main Oscillator Circuit (External Crystal or Ceramic Resonator) 7-2
Figure 7-2 External Clock Circuit 7-2
Figure 7-3 System Clock Circuit Diagram 7-3
Figure 7-4 System Clock Control Register (CLKCON) 7-4
Figure 7-5 Power Circuit (VDD) 7-4
Figure 7-6 Guide Line of Chip Operating Voltage 7-5

Figure 8-1 RESET Sources of the S3F80Q5 8-2
Figure 8-2 RESET Block Diagram of the S3F80Q5 8-3
Figure 8-3 RESET Block Diagram by LVD for the S3F80Q5 in Stop Mode 8-4
Figure 8-4 Timing Diagram for Internal Power-On Reset Circuit 8-5
Figure 8-5 Reset Timing Diagram for the S3F80Q5 in Stop Mode by IPOR 8-5
Figure 8-6 Block Diagram for Backup Mode 8-8
Figure 8-7 Timing Diagram for Backup Mode Input and Released by LVD 8-8
Figure 8-8 Timing Diagram for Backup Mode Input in Stop Mode 8-9

Figure 9-1 S3F80Q5 I/O Port Data Register Format 9-2
Figure 9-2 Pull-up Resistor Enable Registers (Port 0 and Port 2) 9-3

Figure 10-1 Basic Timer Control Register (BTCON) 10-2
Figure 10-2 Timer 0 Control Register (T0CON) 10-5
Figure 10-3 Timer 0 DATA Register (T0DATA) 10-5
Figure 10-4 Simplified Timer 0 Function Diagram: Interval Timer Mode 10-6
Figure 10-5 Simplified Timer 0 Function Diagram: PWM Mode 10-7
Figure 10-6 Simplified Timer 0 Function Diagram: Capture Mode 10-8
Figure 10-7 Basic Timer and Timer 0 Block Diagram 10-9

Figure 11-1 Simplified Timer 1 Function Diagram: Capture Mode 11-2
Figure 11-2 Simplified Timer 1 Function Diagram: Interval Timer Mode 11-3
Figure 11-3 Timer 1 Block Diagram 11-4
Figure 11-4 Timer 1 Control Register (T1CON) 11-5
Figure 11-5 Timer 1 Registers (T1CNTH, T1CNTL, T1DATAH, T1DATAL) 11-6

Figure 12-1 Counter A Block Diagram 12-2
Figure 12-2 Counter A Control Register (CACON) 12-3
Figure 12-3 Counter A Registers 12-3
Figure 12-4 Counter A Output Flip-Flop Waveforms in Repeat Mode 12-5

Figure 13-1 Simplified Timer 2 Function Diagram: Capture Mode 13-2
Figure 13-2 Simplified Timer 2 Function Diagram: Interval Timer Mode 13-3
Figure 13-3 Timer 2 Block Diagram 13-4
Figure 13-4 Timer 2 Control Register (T2CON) 13-5
Figure 13-5 Timer 2 Registers (T2CNTH, T2CNTL, T2DATAH, T2DATAL) 13-6

Figure 14-1 Program Memory Address Space 14-2
Figure 14-2 Smart Option 14-3
Figure 14-3 Flash Memory Control Register (FMCON) 14-6
Figure 14-4 Flash Memory User Programming Enable Register (FMUSR) 14-6

Figure 14-5 Flash Memory Sector Address Register (FMSECH) 14-7
Figure 14-6 Flash Memory Sector Address Register (FMSECL) 14-7
Figure 14-7 Sector Configurations in User Program Mode 14-8
Figure 14-8 Sector Erase Flowchart in User Program Mode 14-9
Figure 14-9 Byte Program Flowchart in a User Program Mode 14-11
Figure 14-10 Program Flowchart in a User Program Mode 14-12

Figure 15-1 Low Voltage Detect (LVD) Block Diagram 15-19
Figure 15-2 Low Voltage Detect Control Register (LVDCON) 15-20
Figure 15-3 Low Voltage Detect Flag Selection Register (LVDSEL) 15-20

Figure 16-1 SPI Block Diagram 16-2
Figure 16-2 SPI Data Timing 16-3
Figure 16-3 SPI Control Register (SPICON) 16-7
Figure 16-4 SPI Status Register (SPISTAT) 16-8
Figure 16-5 SPI Data Register (SPIDATA) 16-9

Figure 17-1 FRT Block Diagram 17-2
Figure 17-2 FRT Control Register (FRTCON) 17-3
Figure 17-3 FRT Registers (FRTCNT0 to FRTCNT2, FRTDAT0 to FRT2) 17-4

Figure 18-1 Stop Mode to Normal Mode Timing Diagram (1) 18-6
Figure 18-2 Stop Mode to Normal Mode Timing Diagram (2) 18-7
Figure 18-3 Input Timing for External Interrupts (Port 0 and Port 2) 18-8
Figure 18-4 Operating Voltage Range of S3F80Q5 18-10

Figure 19-1 24-Pin ELP Package Mechanical Data 19-13

Figure 20-1 Pin Assignment Diagram (24-Pin ELP Package) 20-2

Figure 21-1 Development System Configuration 21-2
Figure 21-2 TB80Q0 Target Board Configuration 21-3
Figure 21-3 50-Pin Connector Pin Assignment for User System 21-5
Figure 21-4 TB80Q0 Probe Adapter Cable 21-5

List of Tables

Table Number	Title	Page Number
Table 1-1	Pin Descriptions of 24-ELP	1-7
Table 2-1	The Summary of S3F80Q5 Register Type	2-5
Table 4-1	Mapped Registers (Bank 0, Set 1)	4-2
Table 4-2	Mapped Registers (Bank 1, Set 1)	4-4
Table 4-3	Each Function Description and Pin Assignment of P3CON in 24-Pin Package	4-30
Table 5-1	S3F80Q5 Interrupt Vectors	5-5
Table 5-2	Interrupt Control Register Overview	5-6
Table 5-3	Vectored Interrupt Source Control and Data Registers	5-8
Table 6-1	Instruction Group Summary	6-2
Table 6-2	Flag Notation Conventions	6-7
Table 6-3	Instruction Set Symbols	6-7
Table 6-4	Instruction Notation Conventions	6-8
Table 6-5	Opcode Quick Reference (0 – 7)	6-9
Table 6-6	Opcode Quick Reference (8 – F)	6-10
Table 6-7	Condition Codes	6-11
Table 7-1	Falling and Rising Time of Operating Voltage	7-5
Table 8-1	Reset Condition in Stop Mode	8-6
Table 8-2	Set 1, Bank 0 Register Values after Reset	8-14
Table 8-3	Set 1, Bank 1 Register Values after Reset	8-16
Table 8-4	Reset Generation According to the Condition of Smart Option	8-17
Table 8-5	Guideline for Unused Pins to Reduced Power Consumption	8-18
Table 8-6	Summary of Each Mode	8-19
Table 9-1	Port Configuration Overview (24-ELP)	9-1
Table 9-2	Port Data Register Summary	9-2
Table 14-1	ISP Sector Size	14-4
Table 14-2	Reset Vector Address	14-5
Table 15-1	LVD Enable Time	15-19
Table 16-1	SPI Pin Assignment	16-5
Table 16-2	SCK Rate Selection	16-5
Table 18-1	Absolute Maximum Ratings	18-2
Table 18-2	D.C. Electrical Characteristics	18-3
Table 18-3	Characteristics of Low Voltage Detect Circuit	18-4
Table 18-4	LVD Enable Time	18-5
Table 18-5	Power On Reset Circuit	18-5
Table 18-6	Falling and Rising Time of Operating Voltage	18-5

Table 18-7 Data Retention Supply Voltage in Stop Mode 18-5
Table 18-8 A.C. Electrical Characteristics 18-8
Table 18-9 Oscillation Characteristics 18-9
Table 18-10 Input/Output Capacitance 18-9
Table 18-11 Ring Oscillator Characteristics 18-9
Table 18-12 Oscillation Stabilization Time 18-10
Table 18-13 AC Electrical Characteristics for Internal Flash ROM 18-11
Table 18-14 ESD Characteristics 18-11
Table 18-14 SPI Interface Transmit/Receive Timing Constants 18-11

Table 20-1 Descriptions of Pins Used to Read/Write the Flash ROM 20-3
Table 20-2 Operating Mode Selection Criteria 20-3

List of Examples

Example Number	Title	Page Number
Example 2-1	Setting the Register Pointers	2-11
Example 2-2	Using the RPs to Calculate the Sum of a Series of Registers	2-12
Example 2-3	Addressing the Common Working Register Area	2-16
Example 2-4	Standard Stack Operations Using PUSH and POP	2-22
Example 8-1	To Enter Stop Mode	8-10
Example 10-1	Configuring the Basic Timer	10-10
Example 10-2	Programming Timer 0	10-11
Example 12-1	To Generate 38 kHz, 1/3 Duty Signal through P3.1	12-6
Example 12-2	To Generate a One-Pulse Signal through P3.1	12-7
Example 14-1	Sector Erase	14-10
Example 14-2	Programming	14-13
Example 14-3	Reading	14-15
Example 14-4	Hard Lock Protection	14-16

1 Product Overview

1.1 S3C8/S3F8-Series Microcontrollers

Zilog's S3C8/S3F8-series of 8-bit single-chip CMOS microcontrollers offers a fast and efficient CPU, a wide range of integrated peripherals, and various Flash memory ROM sizes.

Important CPU features include:

- Efficient register-oriented architecture
- Selectable CPU clock sources
- Idle and Stop power-down mode release by interrupts
- Built-in basic timer with watchdog function

A sophisticated interrupt structure recognizes up to eight interrupt levels. Each level can have one or more interrupt sources and vectors. Fast interrupt processing (within a minimum four CPU clocks) can be assigned to specific interrupt levels.

1.2 S3F80Q5 Microcontroller

The S3F80Q5 single-chip CMOS microcontroller is fabricated using a highly advanced CMOS process and is based on Zilog's newest CPU architecture.

The S3F80Q5 is the microcontroller which has 18KB Flash Memory ROM.

Using a proven modular design approach, Zilog engineers developed S3F80Q5 by integrating the following peripheral modules with the powerful SAM8 RC core:

- Internal LVD circuit and 9-bit programmable pins for external interrupts.
- One 8-bit basic timer for oscillation stabilization and watchdog function (system reset).
- One 8-bit Timer/counter with three operating modes.
- Two 16-bit timer/counters with selectable operating modes.
- One 8-bit counter with auto-reload function and one-shot or repeat control.
- One 24-bit free running timer.
- One 8-bit SPI.

The S3F80Q5 is a versatile general-purpose microcontroller, which is especially suitable for use as remote transmitter controller. It is currently available in 24-pin ELP package.

1.3 Features

CPU

- SAM8 RC CPU core

Memory

- Program memory:
  - 18KB Internal Flash Memory
  - 10 years data retention
  - Endurance: 10,000 Erase/Program cycles
  - Byte Programmable
  - User programmable by "LDC" instruction
- Executable memory: 1KB RAM
- Data memory: 272 byte general purpose RAM

Instruction Set

- 78 instructions
- IDLE and STOP instructions added for power-down modes

Instruction Execution Time

- 500 ns at 8 MHz f_{OSC} (Minimum)

Interrupts

- 19 interrupt sources with 16 vectors and 7 levels (24-ELP)

I/O Ports

- Two 8-bit I/O ports (P0, P1), one 1-bit (P2) and 2-bit (P3) for a total of 19-bit programmable pins (24-ELP)

Carrier Frequency Generator

- One 8-bit counter with auto-reload function and one-shot or repeat control (Counter A)

Basic Timer and Timer/Counters

- One programmable 8-bit basic timer (BT) for oscillation stabilization control or watchdog timer (software reset) function.
- One 8-bit timer/counter (Timer 0) with three operating modes: Interval mode, Capture and PWM mode.
- One 16-bit timer/counter (Timer 1) with two operating modes: Interval and Capture mode.
- One 16-bit timer/counter (Timer 2) with two operating modes: Interval and Capture mode.
- One 24-bit free running timer (FRT).

One Channel SPI

- Support Master and Slave Mode
- Programmable Clock Pre-Scale

Internal Ring OSC

- 15 KHz ± 30 % for free running timer (FRT)

Backup Mode

- When V_{DD} is lower than $V_{LVD,}$ LVD is "ON" and the chip enters Backup Mode to block oscillation.

Low Voltage Detect Circuit

- Low voltage detect to get into Backup Mode and Reset.
  1.65 V (Typ.) ± 50 mV
- Low voltage detect to control LVD_Flag bit.
  1.90, 2.00, 2.10, 2.20 V (Typ.) ± 100 mV (selectable)
- LVD-Reset is enabled in the operating mode:
  When the voltage at V_{DD} is falling down and passing V_{LVD}, the chip enters Backup Mode. The voltage at V_{DD} is rising up, the reset pulse is generated at "V_{DD}> V_{LVD}".
- LVD is disabled in the Stop Mode: If the voltage at V_{DD} is not falling down to V_{POR}, the reset pulse is not generated.

Operating Temperature Range

- −25 °C to +85 °C

Operating Voltage Range

- 1.60 V to 3.6 V at 1 to 8 MHz

Package Types

- 24-pin ELP

1.4 Block Diagram

1.4.1 24-Pin Package

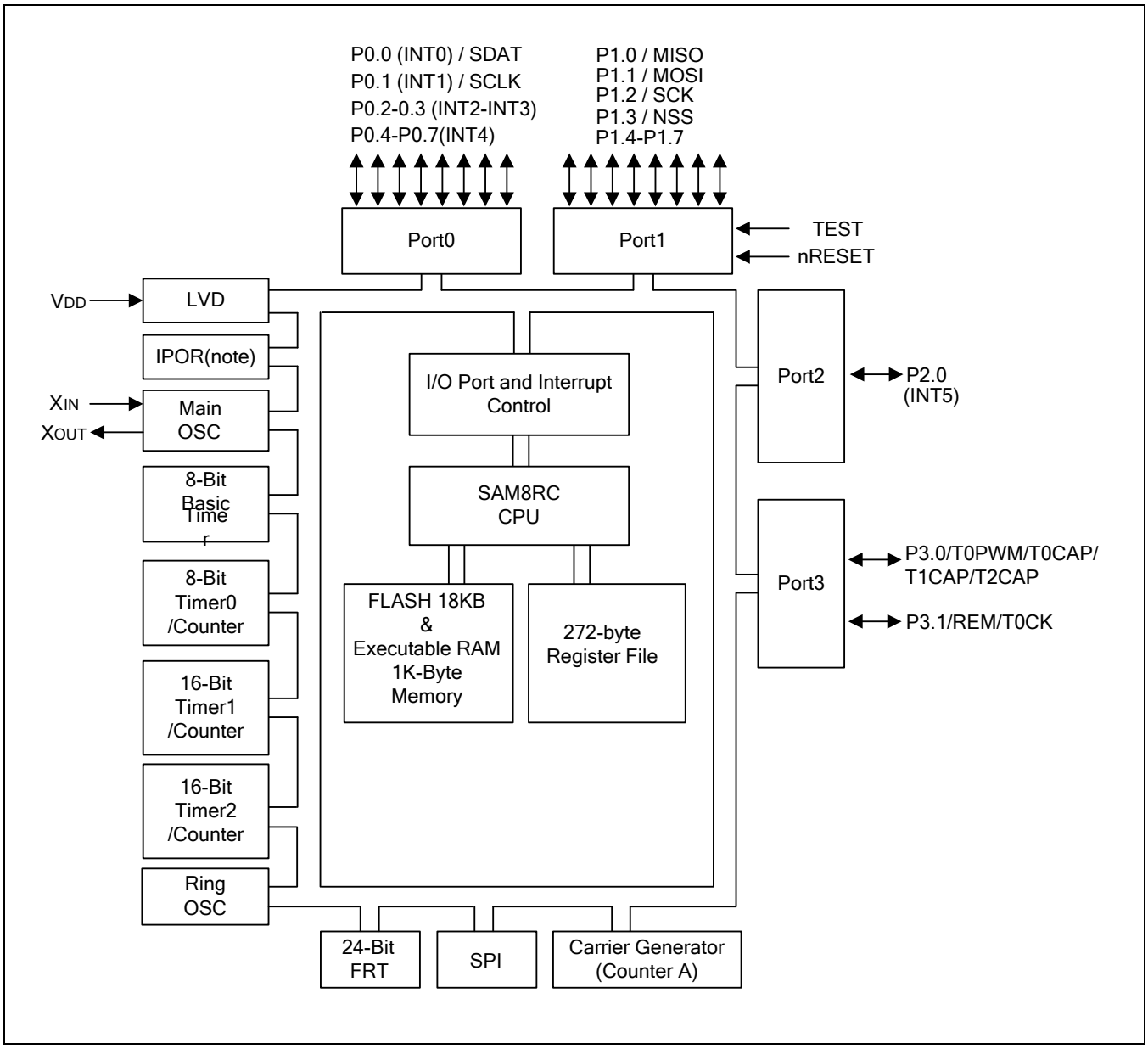

Figure 1-1 Block Diagram (24-Pin)

1.5 Pin Assignments

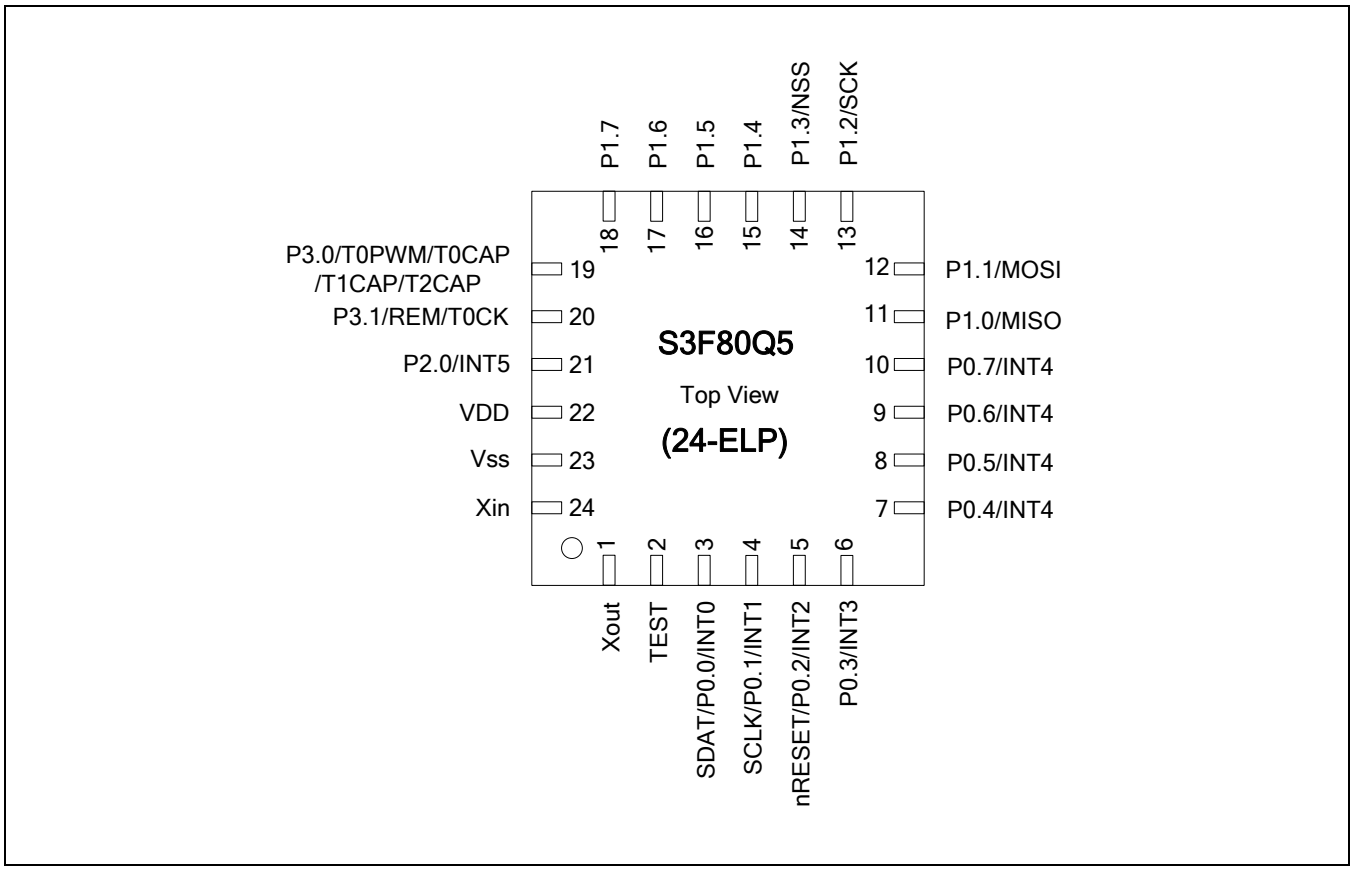

Figure 1-2 Pin Assignment Diagram (24-Pin ELP Package)

Table 1-1 Pin Descriptions of 24-ELP

Pin Names	Pin Type	Pin Description	Circuit Type	Pin No.	Shared Functions
P0.0-P0.7	I/O	I/O port with bit-programmable pins. Configurable to input or push-pull output mode. Pull-up resistors are assignable by software. Pins can be assigned individually as external interrupt inputs with noise filters, interrupt enable/disable, and interrupt pending control. SED & R circuit built in P0 for STOP releasing. In the tool mode, P0.0 and P0.1 are assigned as serial MTP interface pins; SDAT and SCLK	1	3-10	Ext. INT (INT0-INT3) (INT4) (SDAT) (SCLK)
P1.0-P1.7	I/O	I/O port with bit-programmable pins. Configurable to input mode or output mode. Pin circuits are either push-pull or n-channel open-drain type (P1.4-P1.7). P1.0 to P1.3 can be used for SPI function.	2 3	11-18	MISO MOSI SCK NSS
P2.0	I/O	I/O port with bit-programmable pin. Configurable to input mode, push-pull output mode, or n-channel open-drain output mode. Pull-up resistor can be assigned by software. Pin can be assigned as external interrupt input with noise filter, interrupt enable/disable, and interrupt pending control.	4	21	Ext. INT (INT5)
P3.0	I/O	I/O port with bit-programmable pin. Configurable to input mode, push-pull output mode, or n-channel open-drain output mode. Input mode with a pull-up resistor can be assigned by software. This port 3 pin has high current drive capability. Also P3.0 can be assigned individually as an output pin for T0PWM or input pin for T0CAP/T1CAP/T2CAP.	5	19	T0PWM/T0CAP /T1CAP/T2CAP
P3.1	I/O	I/O port with bit-programmable pin. Configurable to input mode, push-pull output mode, or n-channel open-drain output mode. Input mode with a pull-up resistor can be assigned by software. This port 3 pin has high current drive capability. Also P3.1 can be assigned individually as an output pin for REM or input pin for T0CK.	6	20	REM/T0CK
X_{IN} X_{OUT}	–	System clock input and output pins	–	24, 1	–
TEST	I	Test signal input pin If on board programming is needed, It is recommended that add a 0.1 μF capacitor between TEST pin and VSS for better noise immunity; otherwise, connect TEST pin to VSS directly.	–	2	–
V_{DD}	–	Power supply input pin	–	22	–
V_{SS}	–	Ground pin	–	23	–

1.6 Pin Circuits

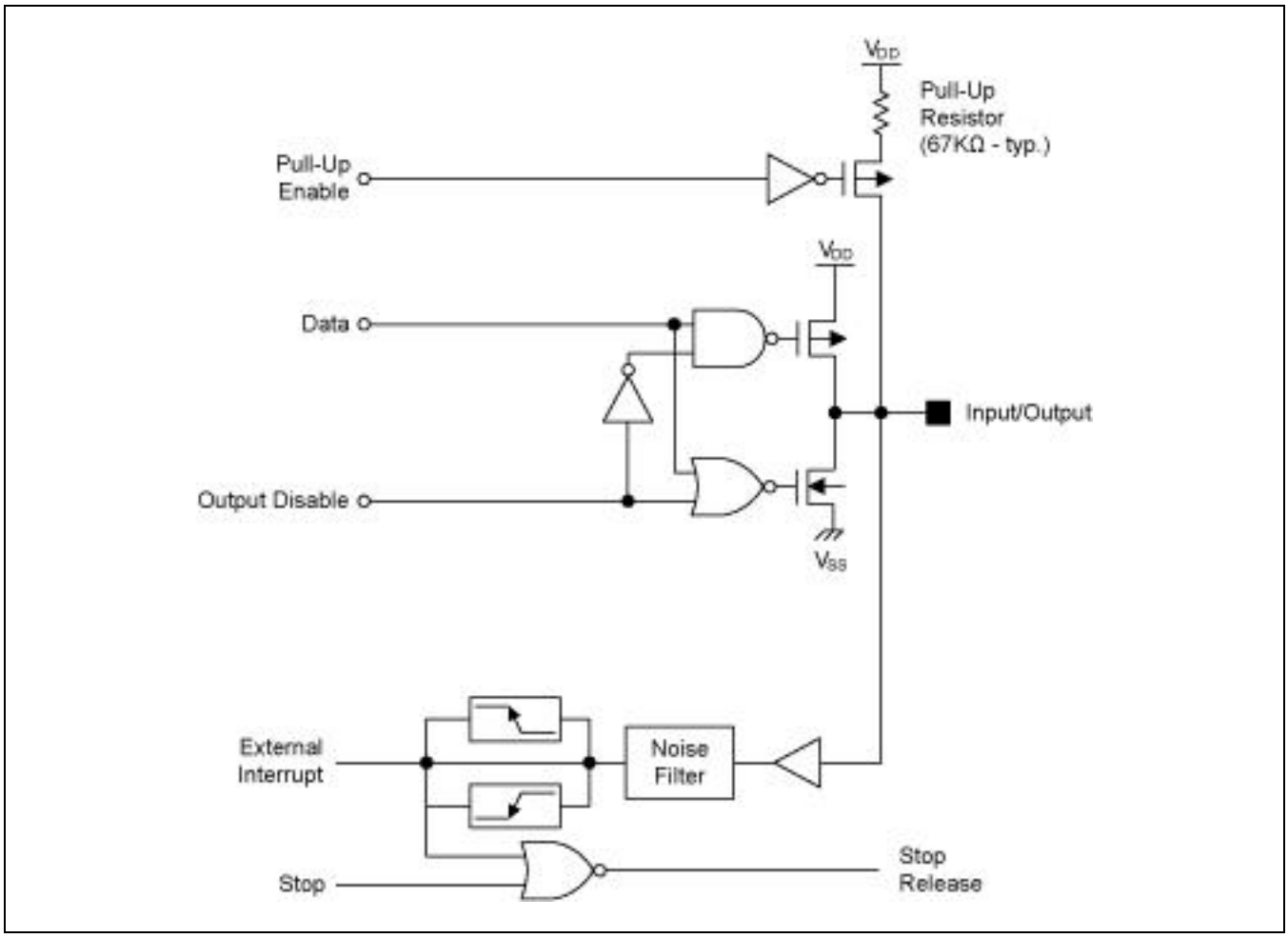

Figure 1-3 Pin Circuit Type 1 (Port 0)

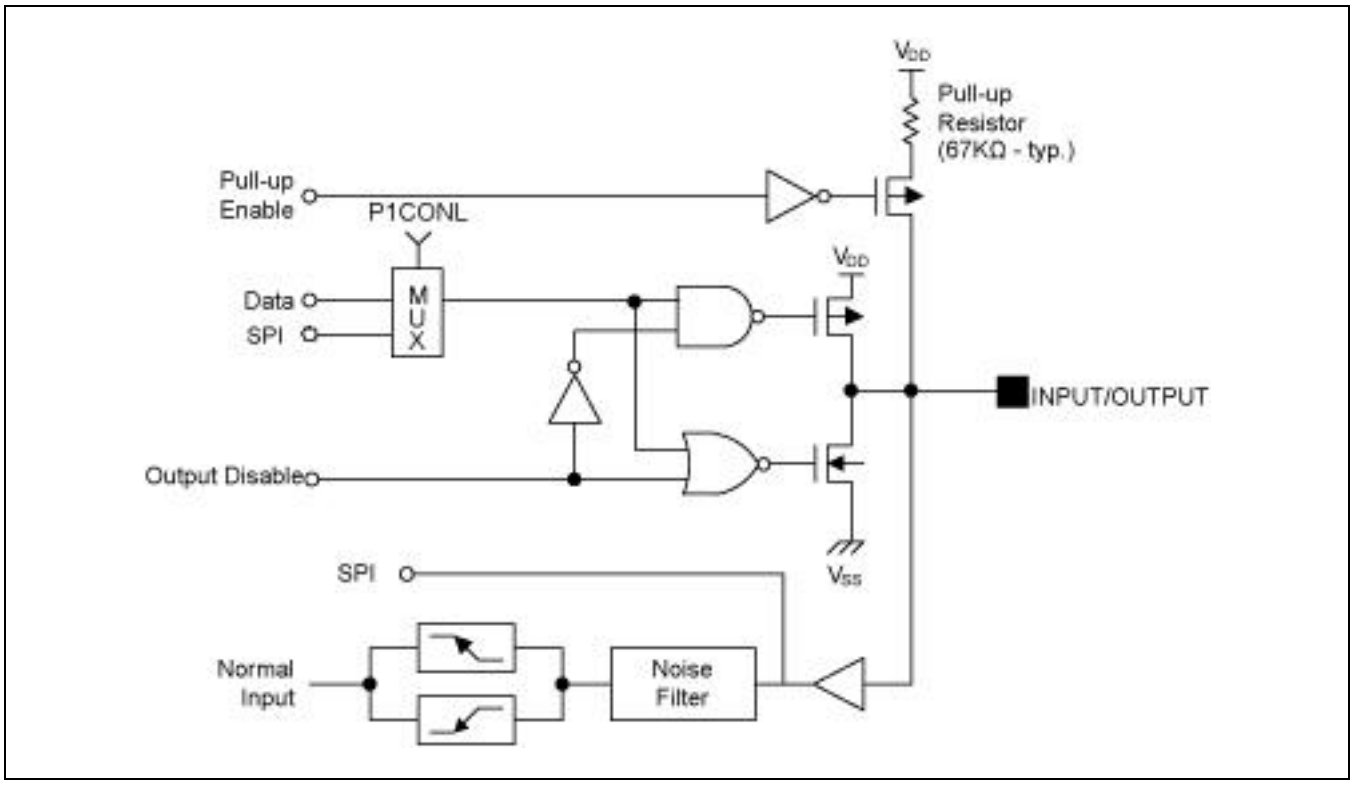

Figure 1-4 Pin Circuit Type 2 (Port 1.0-P1.3)

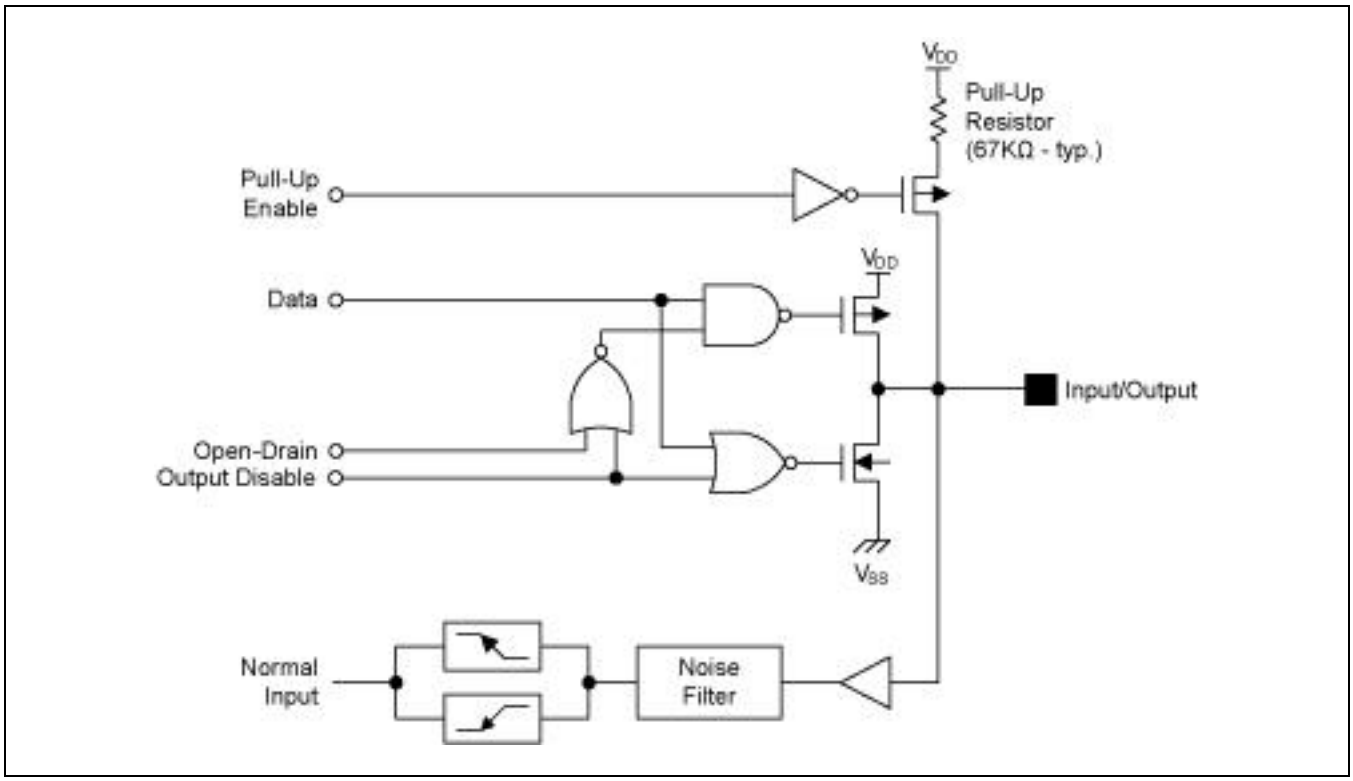

Figure 1-5 Pin Circuit Type 3 (Port 1.4-P1.7)

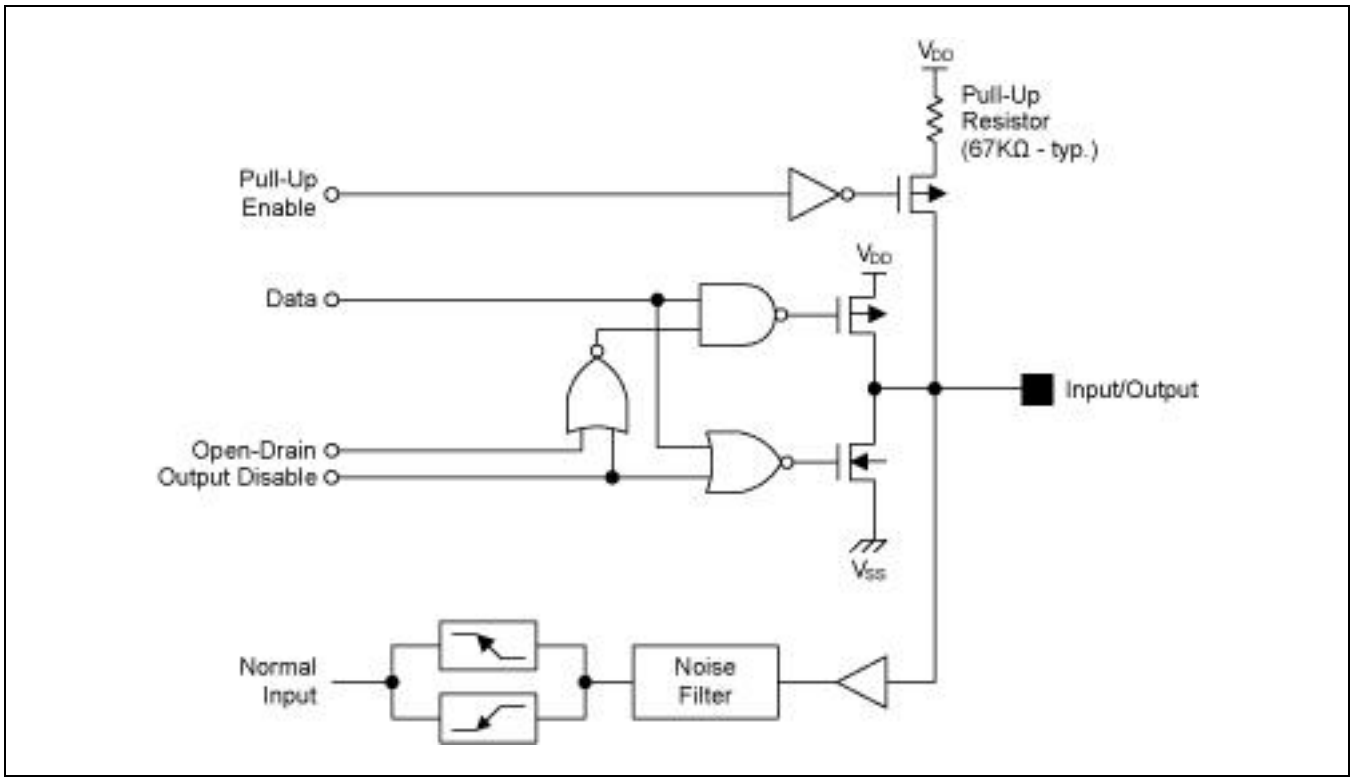

Figure 1-6 Pin Circuit Type 4 (Port 2)

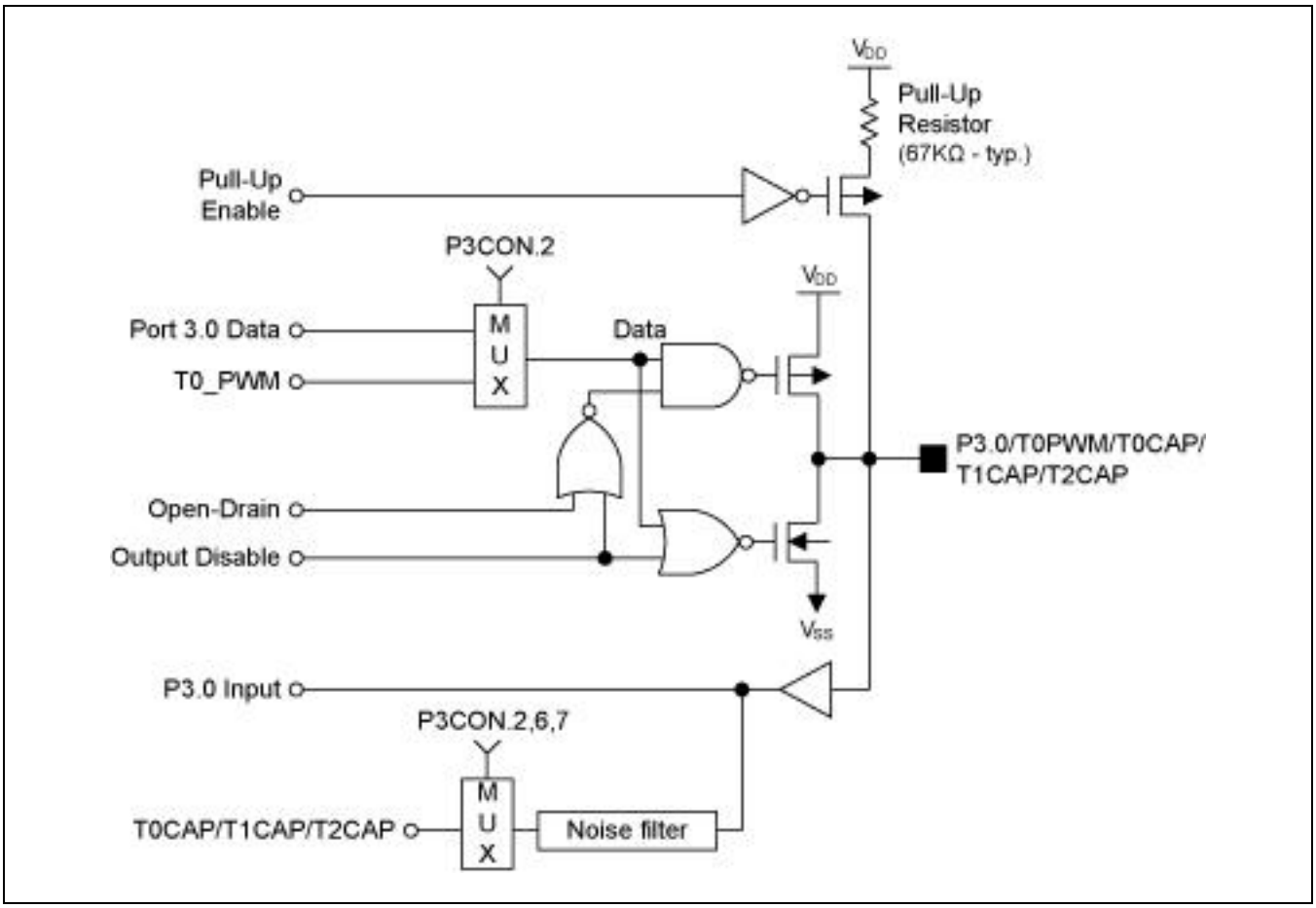

Figure 1-7 Pin Circuit Type 5 (P3.0)

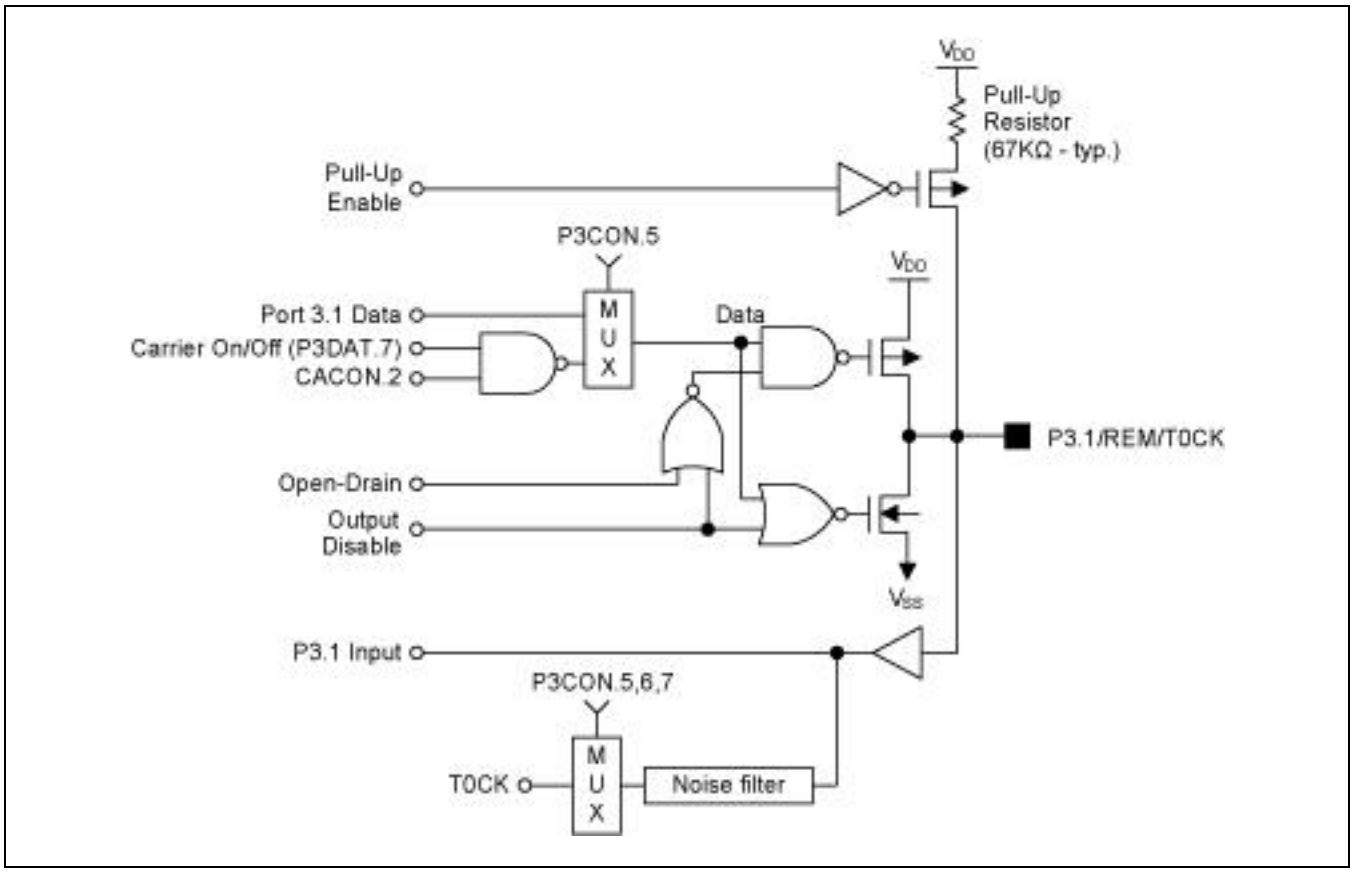

Figure 1-8 Pin Circuit Type 6 (P3.1)

2 Address Space

2.1 Overview

The S3F80Q5 microcontroller has two types of address space:

- Internal program memory (Flash memory)
- Internal register file

A 16-bit address bus supports program memory operations. A separate 8-bit register bus carries addresses and data between the CPU and the register file.

The S3F80Q5 has a programmable internal 18KB Flash ROM. An external memory interface is not implemented.

There are 333 mapped registers in the internal register file. Of these, 272 byte are for general-purpose use. (This number includes a 16 byte working register common area that is used as a "scratch area" for data operations, a 192 byte prime register area, and a 64 byte area (Set 2) that is also used for stack operations). Twenty-two 8-bit registers are used for CPU and system control and 39 registers are mapped peripheral control and data registers.

2.2 Program Memory

Program memory stores program code or table data. The S3F80Q5 has 18KB of internal programmable Flash memory. The program memory address range is therefore 0000H-47FFH of Flash memory; (see *Figure 2-1*).

The first 256 bytes of the program memory (0H-0FFH) are reserved for interrupt vector addresses. Unused locations (0000H-00FFH except 03CH, 03DH, 03EH and 03FH) in this address range can be used as normal program memory. The location 03CH, 03DH, 03EH and 03FH is used as Smart Option ROM cell. If you use the vector address area to store program code, be careful to avoid overwriting vector addresses stored in these locations.

The program memory address at which program execution starts after reset is 0100H (default). If you use ISP™ sectors as the ISP™ software storage, the reset vector address can be changed by setting the Smart Option (See *Figure 2-2*).

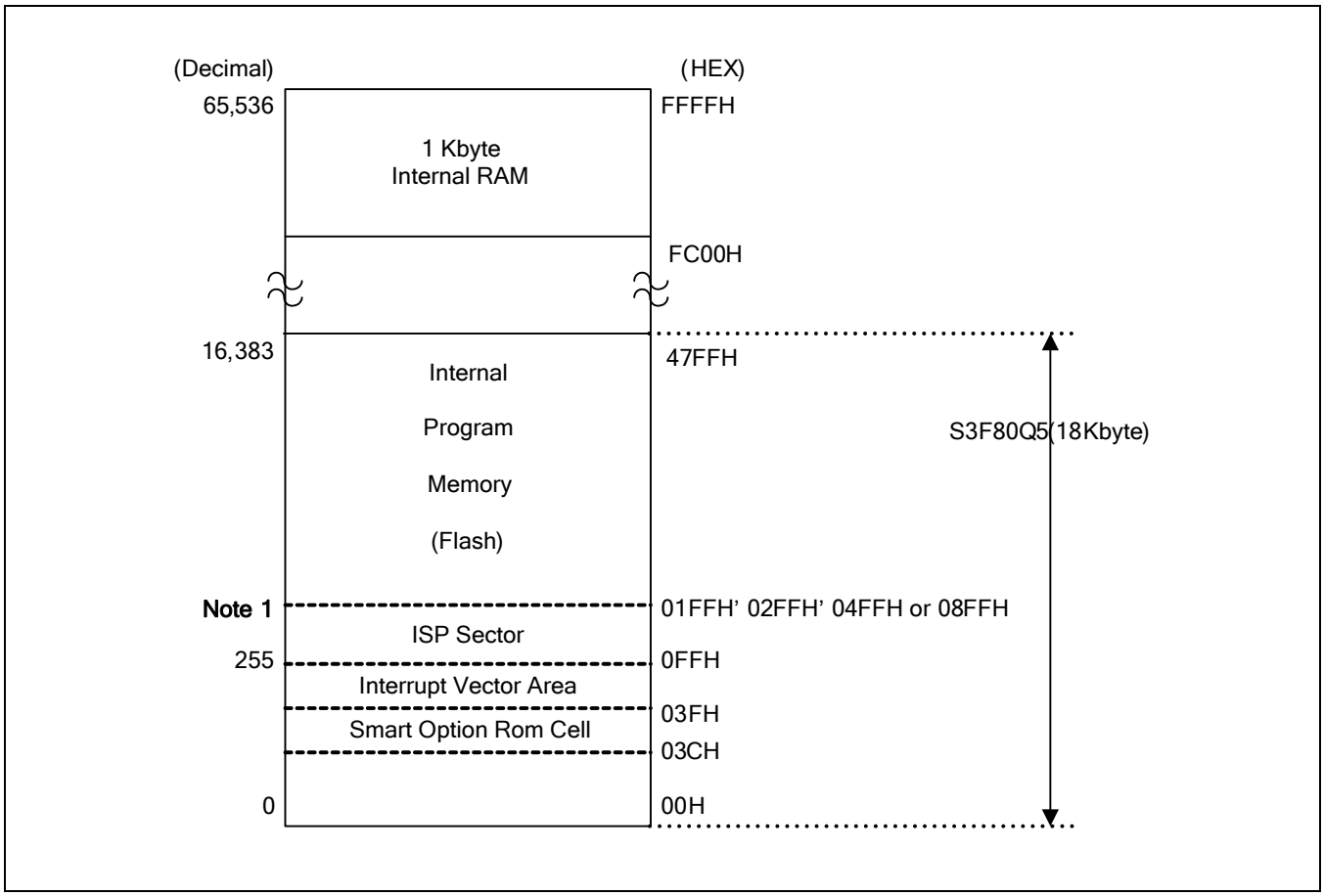

Figure 2-1 Program Memory Address Space

NOTE:

1. The size of ISP™ sector can be varied by Smart Option.; (see *Figure 2-2*). According to the Smart Option setting related to the ISP, ISP reset vector address can be changed one of addresses to be select (200H, 300H, 500H or 900H).
2. ISP™ sector can store On Board Program Software (Refer to Chapter 14 Embedded Flash Memory Interface).

2.2.1 Smart Option

Smart Option is the program memory option for starting condition of the chip. The program memory addresses used by Smart Option are from 003CH to 003FH. The S3F80Q5 only use 003EH and 003FH. User can write any value in the not used addresses (003CH and 003DH). The default value of Smart Option bits in program memory is 0FFH (Normal reset vector address 100H, ISP protection disable). Before execution the program memory code, user can set the Smart Option bits according to the hardware option for user to want to select.

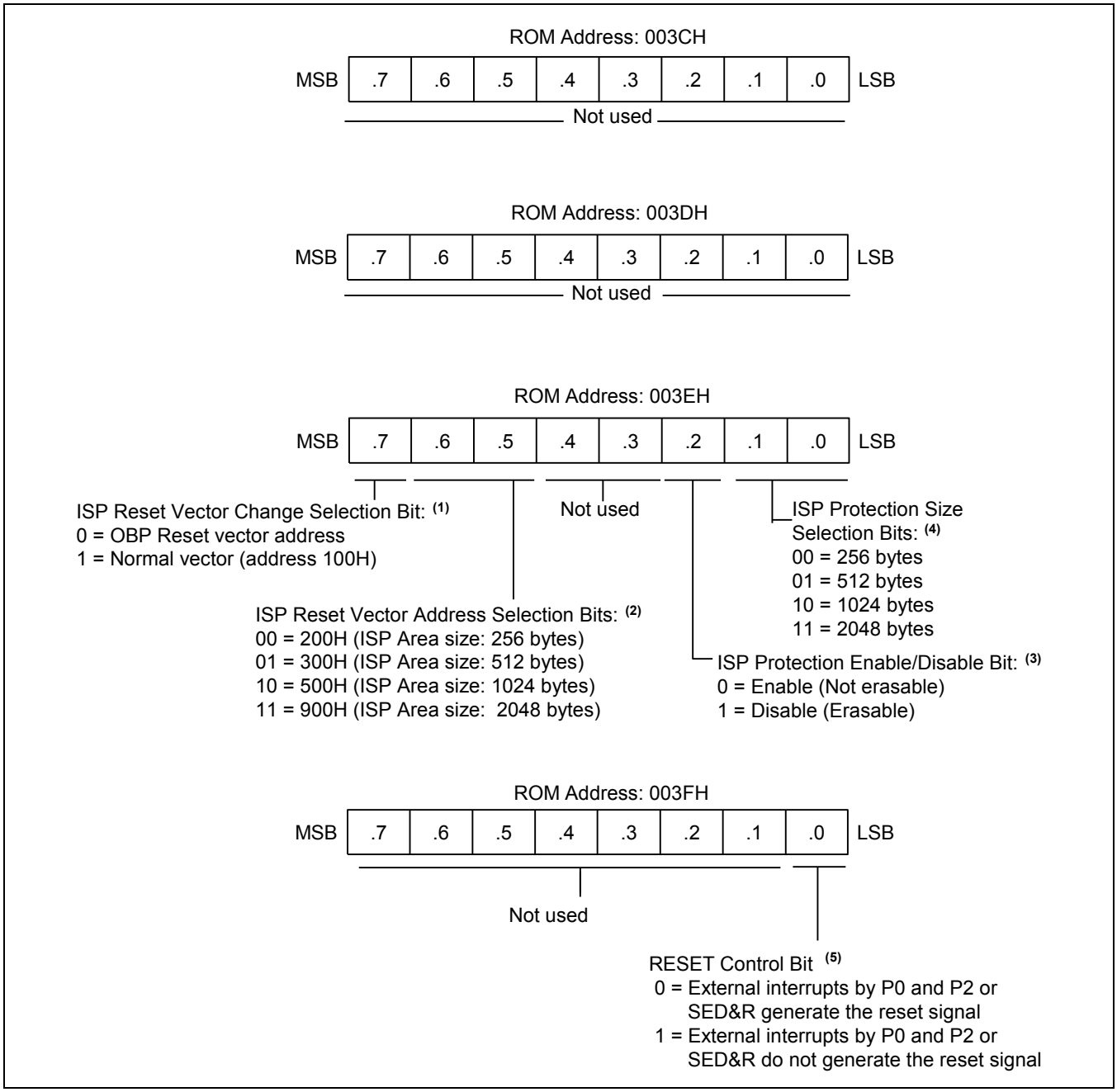

Figure 2-2 Smart Option

NOTE:

1. By setting ISP Reset Vector Change Selection Bit (3EH.7) to "0", user can have the available ISP area.
   If ISP Reset Vector Change Selection Bit (3EH.7) is "1", 3EH.6 and 3EH.5 are meaningless.
2. If ISP Reset Vector Change Selection Bit (3EH.7) is "0", user must change ISP reset vector address from 0100H to some address which user want to set reset address (0200H, 0300H, 0500H or 0900H).
   If the reset vector address is 0200H, the ISP area can be assigned from 0100H to 01FFH (256 bytes).
   If 0300H, the ISP area can be assigned from 0100H to 02FFH (512 bytes). If 0500H, the ISP area can be assigned from 0100H to 04FFH (1024 bytes). If 0900H, the ISP area can be assigned from 0100H to 08FFH (2048 bytes).
3. If ISP Protection Enable/Disable Bit is "0", user can't erase or program the ISP area selected by 3EH.1 and 3EH.0 in Flash memory.
4. User can select suitable ISP protection size by 3EH.1 and 3EH.0. If ISP Protection Enable/Disable Bit (3EH.2) is "1", 3EH.1 and 3EH.0 are meaningless.
5. External interrupts can be used to release Stop Mode. When RESET Control Bit (3FH.0) is "0" and external interrupts is enabled, external interrupts wake MCU from Stop Mode and generate reset signal. Any falling edge input signals of P0 can wake MCU from Stop Mode and generate reset signal.
   When RESET Control Bit (3FH.0) is "1", S3F80Q5 is only released Stop Mode and is not generated reset signal.

2.3 Register Architecture

In the S3F80Q5 implementation, the upper 64 byte area of register files is expanded two 64 byte areas, called set 1 and set 2. The upper 32 byte area of set 1 is further expanded two 32 byte register banks (bank 0 and bank 1), and the lower 32 byte area is a single 32 byte common area.

In case of S3F80Q5 the total number of addressable 8-bit registers is 333. Of these 333 registers, 22 bytes are for CPU and system control registers, 39 bytes are for peripheral control and data registers, 16 bytes are used as shared working registers, and 272 registers are for general-purpose use.

The extension of register space into separately addressable areas (sets, banks) is supported by various addressing mode restrictions: the select bank instructions, SB0 and SB1.

Specific register types and the area occupied in the S3F80Q5 internal register space are summarized in *Table 2-1*.

Table 2-1 The Summary of S3F80Q5 Register Type

Register Type	Number of Bytes
General-purpose registers (including the 16 byte common working register area, the 64 byte set 2 area and 192 byte prime register area of page 0)	272
CPU and system control registers	22
Mapped clock, peripheral, and I/O control and data registers (bank 0: 27 registers, bank 1: 12 registers)	39
Total Addressable Bytes	333

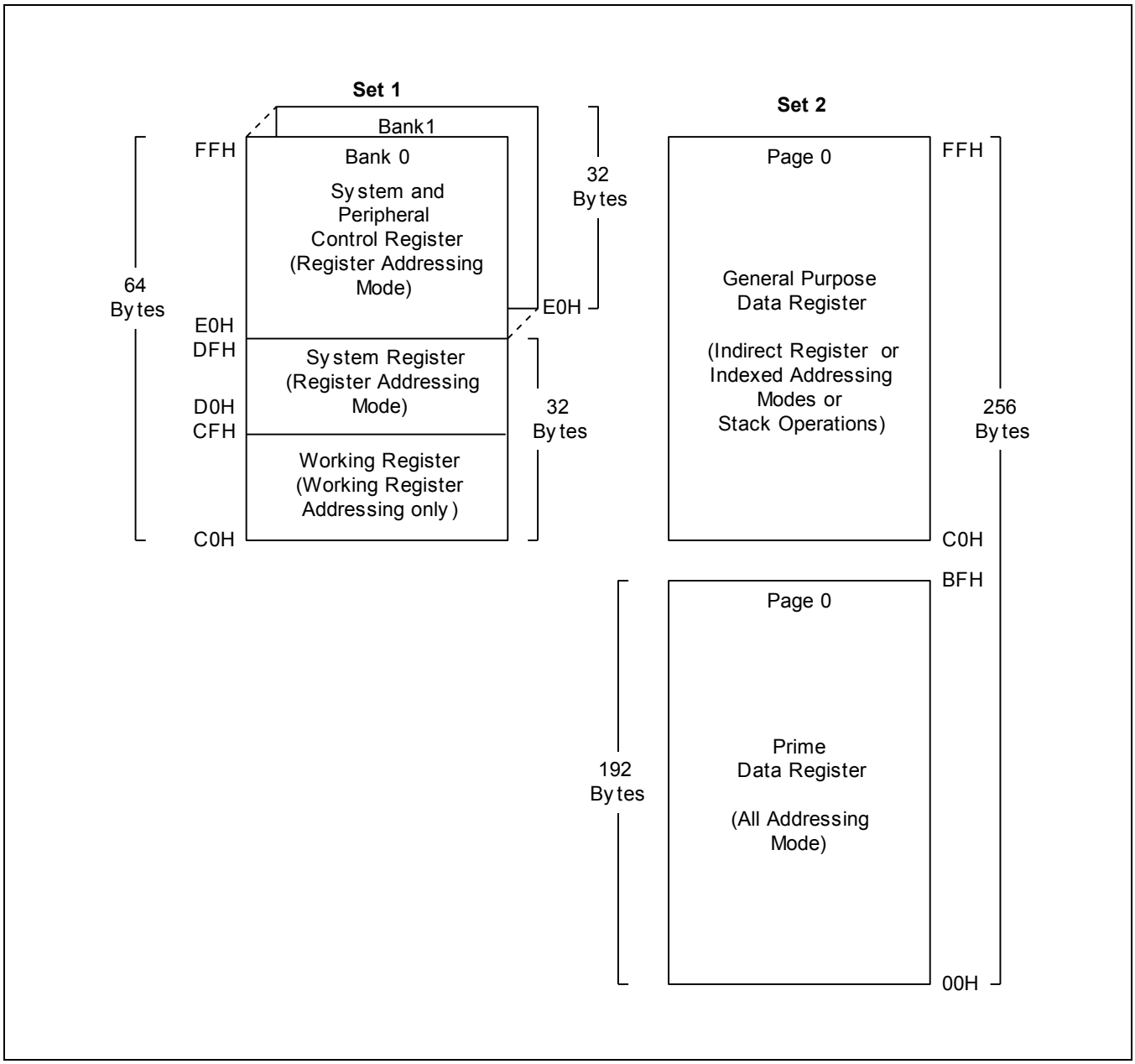

Figure 2-3 Internal Register File Organization

2.3.1 Register Page Pointer (PP)

The S3C8/S3F8-series architecture supports the logical expansion of the physical 333 byte internal register files (using an 8-bit data bus) into as many as 16 separately addressable register pages. Page addressing is controlled by the register page pointer PP (DFH, Set 1, and Bank 0). In the S3F80Q5 microcontroller, a paged register file expansion is not implemented and the register page pointer settings therefore always point to "page 0".

Following a reset, the page pointer's source value (lower nibble) and destination value (upper nibble) are always "0000" automatically. Therefore, S3F80Q5 is always selected page 0 as the source and destination page for register addressing. These page pointer (PP) register settings, as shown in *Figure 2-4*, should not be modified during normal operation.

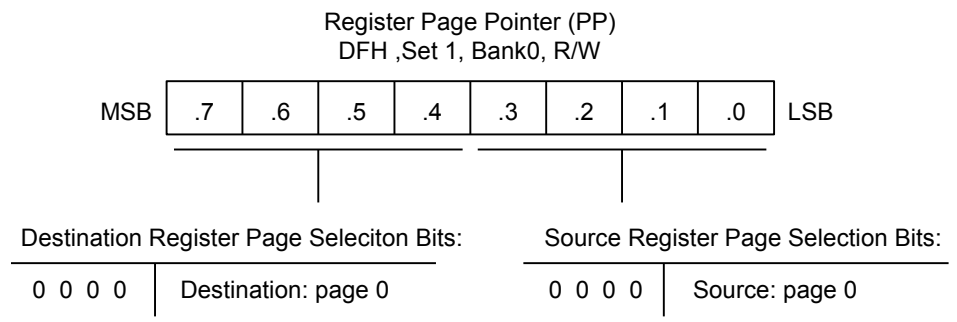

NOTE: A hardware reset operation writes the 4-bit destination and source values shown above to the register page pointer. These values should not be modified to address other pages.

Figure 2-4 Register Page Pointer (PP)

2.3.2 Register Set 1

The term set 1 refers to the upper 64 bytes of the register file, locations C0H–FFH.

The upper 32 byte area of this 64 byte space (E0H-FFH) is divided into two 32 byte register banks, bank 0 and bank 1. The set register bank instructions SB0 or SB1 are used to address one bank or the other. In the S3F80Q5 microcontroller, bank 1 is implemented. The set register bank instructions, SB0 or SB1, are used to address one bank or the other. A hardware reset operation always selects bank 0 addressing.

The upper two 32 byte area of set 1, bank 0, (E0H-FFH) contains 31 mapped systems and peripheral control registers. Also, the upper 32 byte area of set1, bank1 (E0H-FFH) contains 16 mapped peripheral control register. The lower 32 byte area contains 15 system registers (D0H-DFH) and a 16 byte common working register area (C0H-CFH). You can use the common working register area as a "scratch" area for data operations being performed in other areas of the register file.

Registers in set 1 location are directly accessible at all times using the Register addressing mode. The 16 byte working register area can only be accessed using working register addressing. (For more information about working register addressing, please refer to Chapter 3 Addressing Modes)

2.3.3 Register Set 2

The same 64 byte physical space that is used for set 1 location C0H-FFH is logically duplicated to add another 64 bytes of register space. This expanded area of the register file is called set 2. The set 2 locations (C0H-FFH) is accessible on page 0 in the S3F80Q5 register space.

The logical division of set 1 and set 2 is maintained by means of addressing mode restrictions: You can use only Register addressing mode to access set 1 locations; to access registers in set 2, you must use Register Indirect addressing mode or Indexed addressing mode.

The set 2 register area is commonly used for stack operations.

2.3.4 Prime Register Space

The lower 192 bytes of the 256 byte physical internal register file (00H-BFH) are called the prime register space or, more simply, the prime area. You can access registers in this address using any addressing mode. (In other words, there is no addressing mode restriction for these registers, as is the case for set 1 and set 2 registers.). The prime register area on page 0 is immediately addressable following a reset.

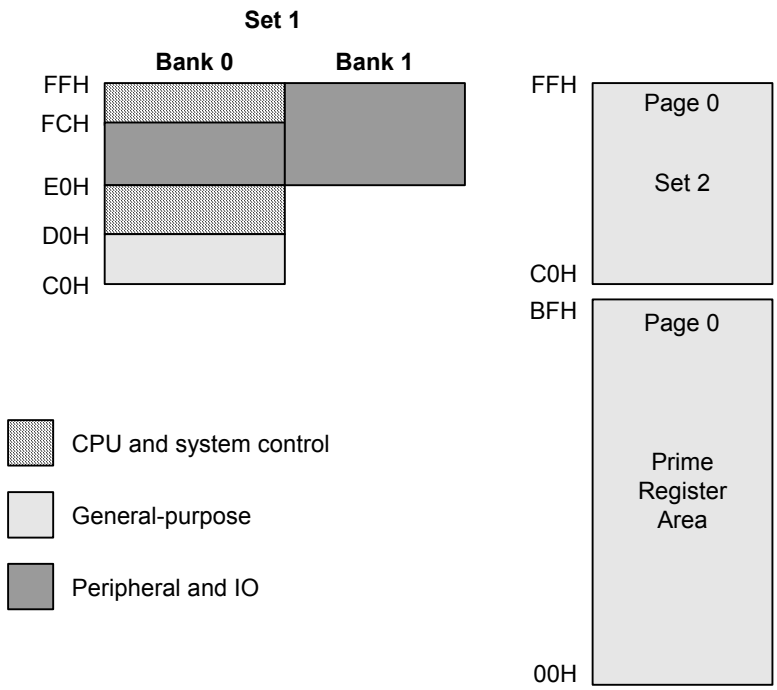

Figure 2-5 Set 1, Set 2, and Prime Area Register Map

2.3.5 Working Registers

Instructions can access specific 8-bit registers or 16-bit register pairs using either 4-bit or 8-bit address fields. When 4-bit working register addressing is used, the 256 byte register file can be seen by the programmer as consisting of 32 8 byte register groups or "slices". Each slice consists of eight 8-bit registers.

Using the two 8-bit register pointers, RP1 and RP0, two working register slices can be selected at any one time to form a 16-byte working register block. Using the register pointers, you can move this 16 byte register block anywhere in the addressable register file, except for the set 2 area.

The terms slice and block are used in this manual to help you visualize the size and relative locations of selected working register spaces:

- One working register slice is 8 bytes (eight 8-bit working registers; R0-R7 or R8-R15)
- One working register block is 16 bytes (sixteen 8-bit working registers; R0-R15)

All of the registers in an 8 byte working register slice have the same binary value for their five most significant address bits. This makes it possible for each register pointer to point to one of the 24 slices in the register file. The base addresses for the two selected 8 byte register slices are contained in register pointers RP0 and RP1.

After a reset, RP0 and RP1 always point to the 16 byte common area in set 1 (C0H-CFH).

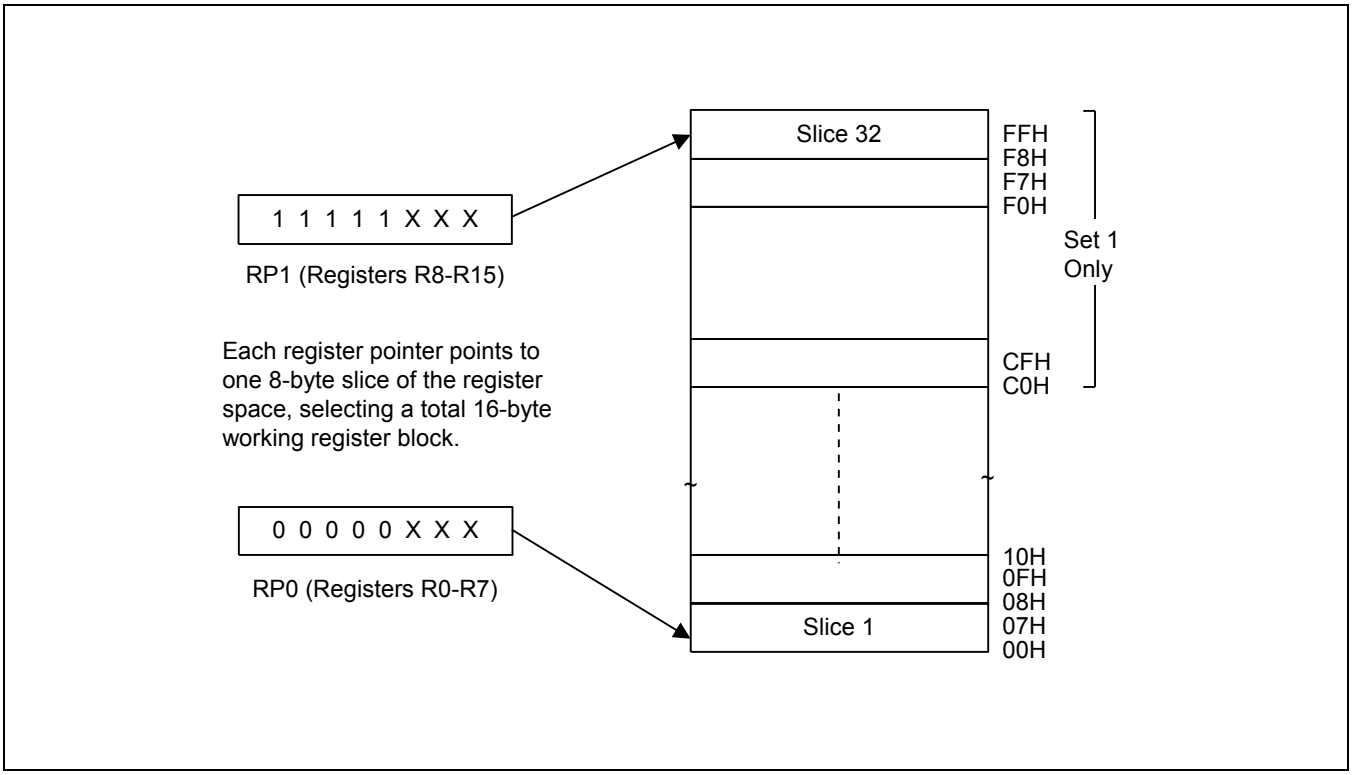

Figure 2-6 8-byte Working Register Areas (Slices)

2.3.6 Using the Register Pointers

Register pointers RP0 and RP1, mapped to addresses D6H and D7H in set 1, are used to select two movable 8-byte working register slices in the register file. After a reset, they point to the working register common area: RP0 points to addresses C0H-C7H, and RP1 points to addresses C8H-CFH.

To change a register pointer value, you load a new value to RP0 and/or RP1 using an SRP or LD instruction (See *Figure 2-6* and *Figure 2-7*).

With working register addressing, you can only access those two 8-bit slices of the register file that are currently pointed to by RP0 and RP1. You cannot, however, use the register pointers to select a working register space in set 2, C0H-FFH, because these locations can be accessed only using the Indirect Register or Indexed addressing modes.

The selected 16 byte working register block usually consists of two contiguous 8 byte slices. As a general programming guideline, we recommend that RP0 point to the "lower" slice and RP1 point to the "upper" slice (See *Figure 2-6*). In some cases, it may be necessary to define working register areas in different (non-contiguous) areas of the register file. In *Figure 2-7*, RP0 points to the "upper" slice and RP1 to the "lower" slice.

Because a register pointer can point to the either of the two 8 byte slices in the working register block, you can define the working register area very flexibly to support program requirements.

Example 2-1 Setting the Register Pointers

```
SRP     #70H          ;RP0   ←     70H, RP1            ← 78H
SRP1    #48H          ;RP0   ←     no change, RP1      ← 48H,
SRP0    #0A0H         ;RP0   ←     A0H, RP1            ← no change
CLR     RP0           ;RP0   ←     00H, RP1            ← no change
LD      RP1,#0F8H     ;RP0   ←     no change, RP1      ← 0F8H
```

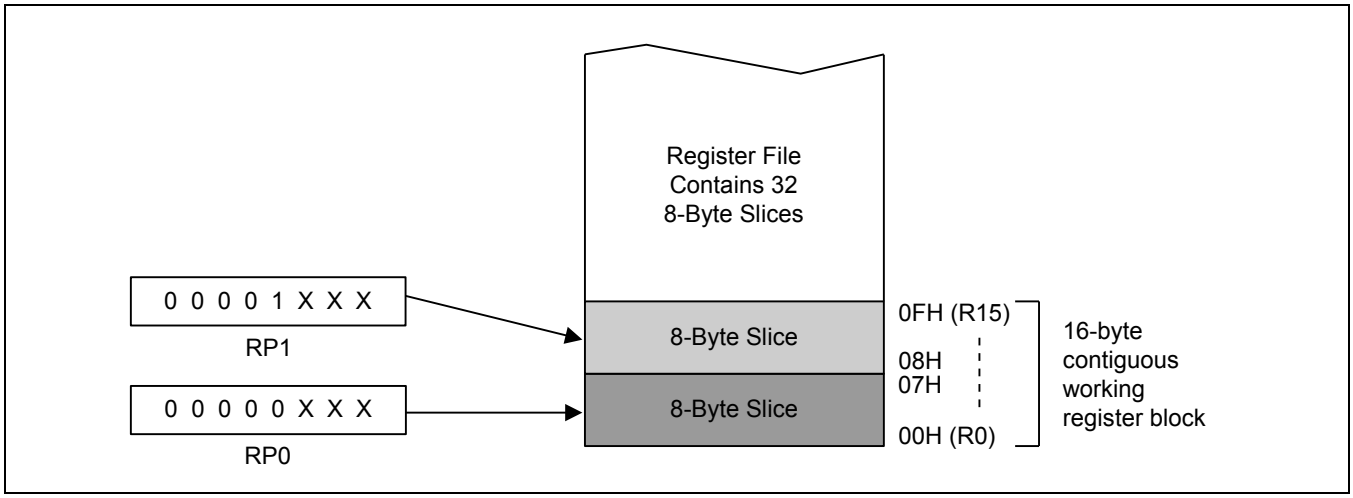

Figure 2-7 Contiguous 16-byte Working Register Block

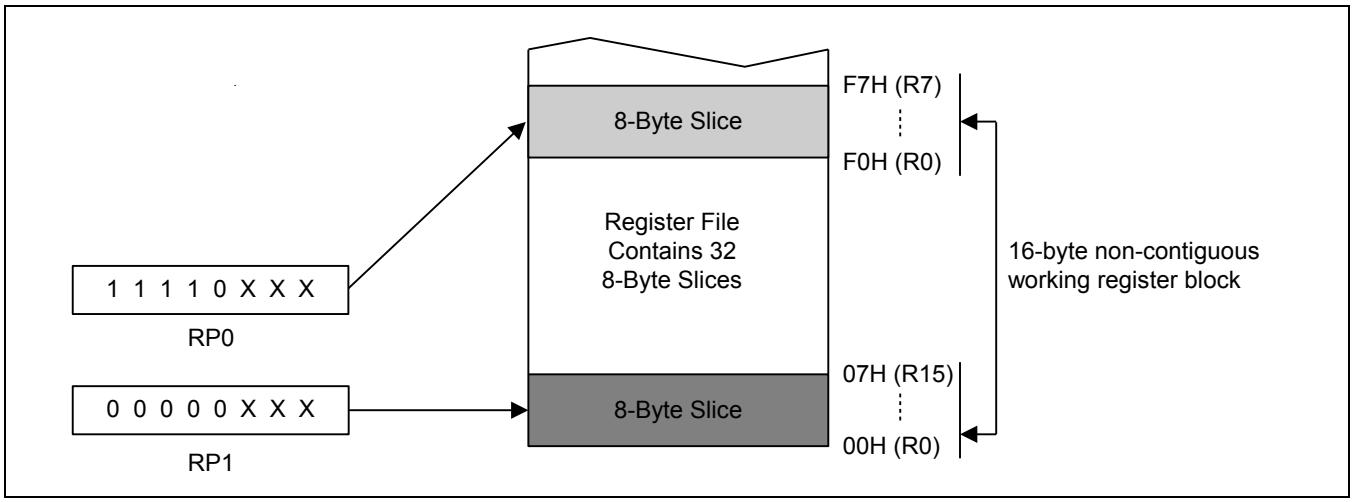

Figure 2-8 Non-Contiguous 16-byte Working Register Block

Example 2-2 Using the RPs to Calculate the Sum of a Series of Registers

Calculate the sum of registers 80H-85H using the register pointer.
The register addresses 80H through 85H contains the values 10H, 11H, 12H, 13H, 14H, and 15 H, respectively:

```
SRP0    #80H        ;RP0    ← 80H
ADD     R0,R1       ;R0     ← R0 + R1
ADC     R0,R2       ;R0     ← R0 + R2 + C
ADC     R0,R3       ;R0     ← R0 + R3 + C
ADC     R0,R4       ;R0     ← R0 + R4 + C
ADC     R0,R5       ;R0     ← R0 + R5 + C
```

The sum of these six registers, 6FH, is located in the register R0 (80H). The instruction string used in this example takes 12 bytes of instruction code and its execution time is 36 cycles.
If the register pointer is not used to calculate the sum of these registers, the following instruction sequence would have to be used:

```
ADD     80H,81H     ;80H    ← (80H) + (81H)
ADC     80H,82H     ;80H    ← (80H) + (82H) + C
ADC     80H,83H     ;80H    ← (80H) + (83H) + C
ADC     80H,84H     ;80H    ← (80H) + (84H) + C
ADC     80H,85H     ;80H    ← (80H) + (85H) + C
```

Now, the sum of the six registers is also located in register 80H. However, this instruction string takes 15 bytes of instruction code instead of 12 bytes, and its execution time is 50 cycles instead of 36 cycles.

2.4 Register Addressing

The S3C8-series register architecture provides an efficient method of working register addressing that takes full advantage of shorter instruction formats to reduce execution time.

With Register (R) addressing mode, in which the operand value is the content of a specific register or register pair, you can access all locations in the register file except for set 2. With working register addressing, you use a register pointer to specify an 8 byte working register space in the register file and an 8-bit register within that space.

Registers are addressed either as a single 8-bit register or as a paired 16-bit register space. In a 16-bit register pair, the address of the first 8-bit register is always an even number and the address of the next register is always an odd number. The most significant byte of the 16-bit data is always stored in the even-numbered register; the least significant byte is always stored in the next (+ 1) odd-numbered register.

Working register addressing differs from Register addressing because it uses a register pointer to identify a specific 8 byte working register space in the internal register file and a specific 8-bit register within that space.

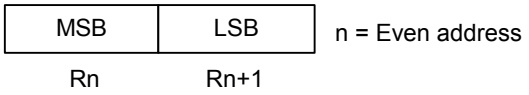

Figure 2-9 16-bit Register Pair

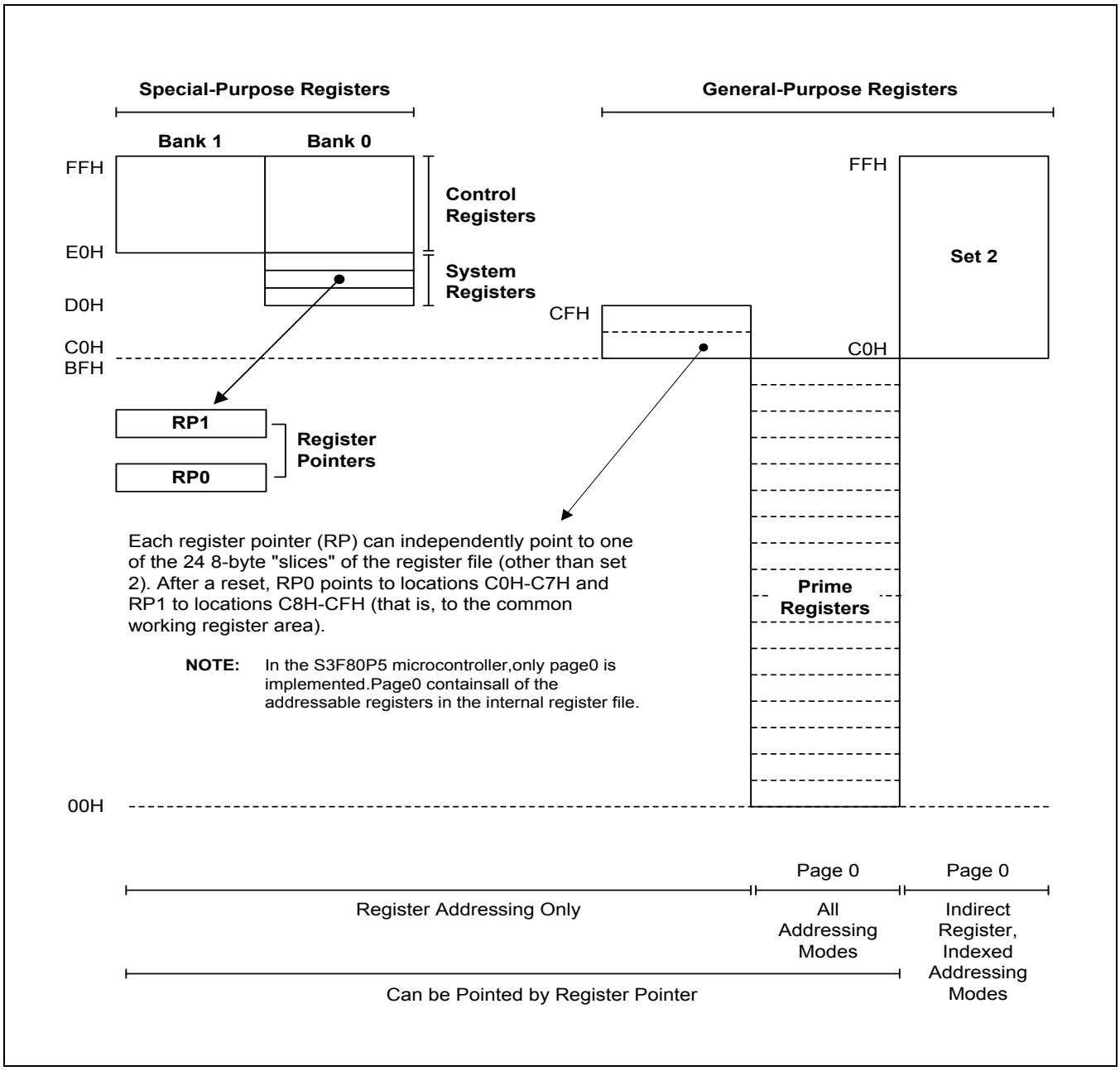

Figure 2-10 Register File Addressing

2.4.1 Common Working Register Area (C0H-CFH)

After a reset, register pointers RP0 and RP1 automatically select two 8 byte register slices in set 1, locations C0H–CFH, as the active 16 byte working register block:

- RP0 → C0H-C7H
- RP1 → C8H-CFH

This 16 byte address range is called common area. That is, locations in this area can be used as working registers by operations that address any location on any page in the register file. Typically, these working registers serve as temporary buffers for data operations.

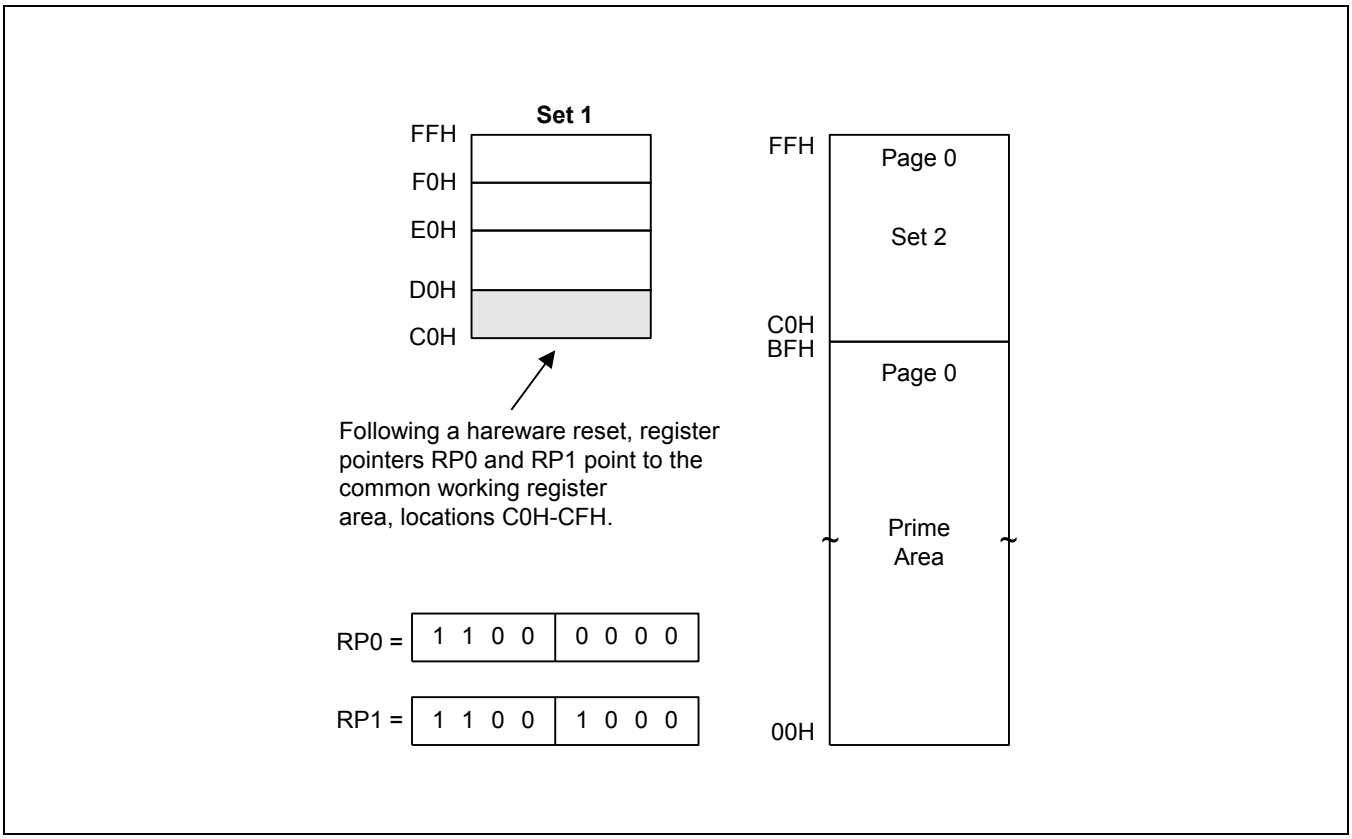

Figure 2-11 Common Working Register Area

Example 2-3 Addressing the Common Working Register Area

As the following examples show, you should access working registers in the common area, locations C0H-CFH, using working register addressing mode only.

Example 1:

```
LD      0C2H, 40H             ; Invalid addressing mode!
```

Use working register addressing instead:

```
SRP     #0C0H
LD      R2, 40H               ; R2 (C2H) ← the value in location 40H
```

Example 2:

```
ADD     0C3H, #45H            ; Invalid addressing mode!
```

Use working register addressing instead:

```
SRP     #0C0H
ADD     R3, #45H                      ; R3 (C3H) ← R3 + 45H
```

2.4.2 4-bit Working Register Addressing

Each register pointer defines a movable 8 byte slice of working register space. The address information stored in a register pointer serves as an addressing "window" that makes it possible for instructions to access working registers very efficiently using short 4-bit addresses. When an instruction addresses a location in the selected working register area, the address bits are concatenated in the following way to form a complete 8-bit address:

- The high-order bit of the 4-bit address selects one of the register pointers ("0" selects RP0; "1" selects RP1);
- The five high-order bits in the register pointer select an 8-byte slice of the register space;
- The three low-order bits of the 4-bit address select one of the eight registers in the slice.

As shown in *Figure 2-12*, the result of this operation is that the five high-order bits from the register pointer are concatenated with the three low-order bits from the instruction address to form the complete address. As long as the address stored in the register pointer remains unchanged, the three bits from the address will always point to an address in the same 8 byte register slice.

Figure 2-13 shows a typical example of 4-bit working register addressing. The high-order bit of the instruction "INC R6" is "0", which selects RP0. The five high-order bits stored in RP0 (01110B) are concatenated with the three low-order bits of the instruction's 4-bit address (110B) to produce the register address 76H (01110110B).

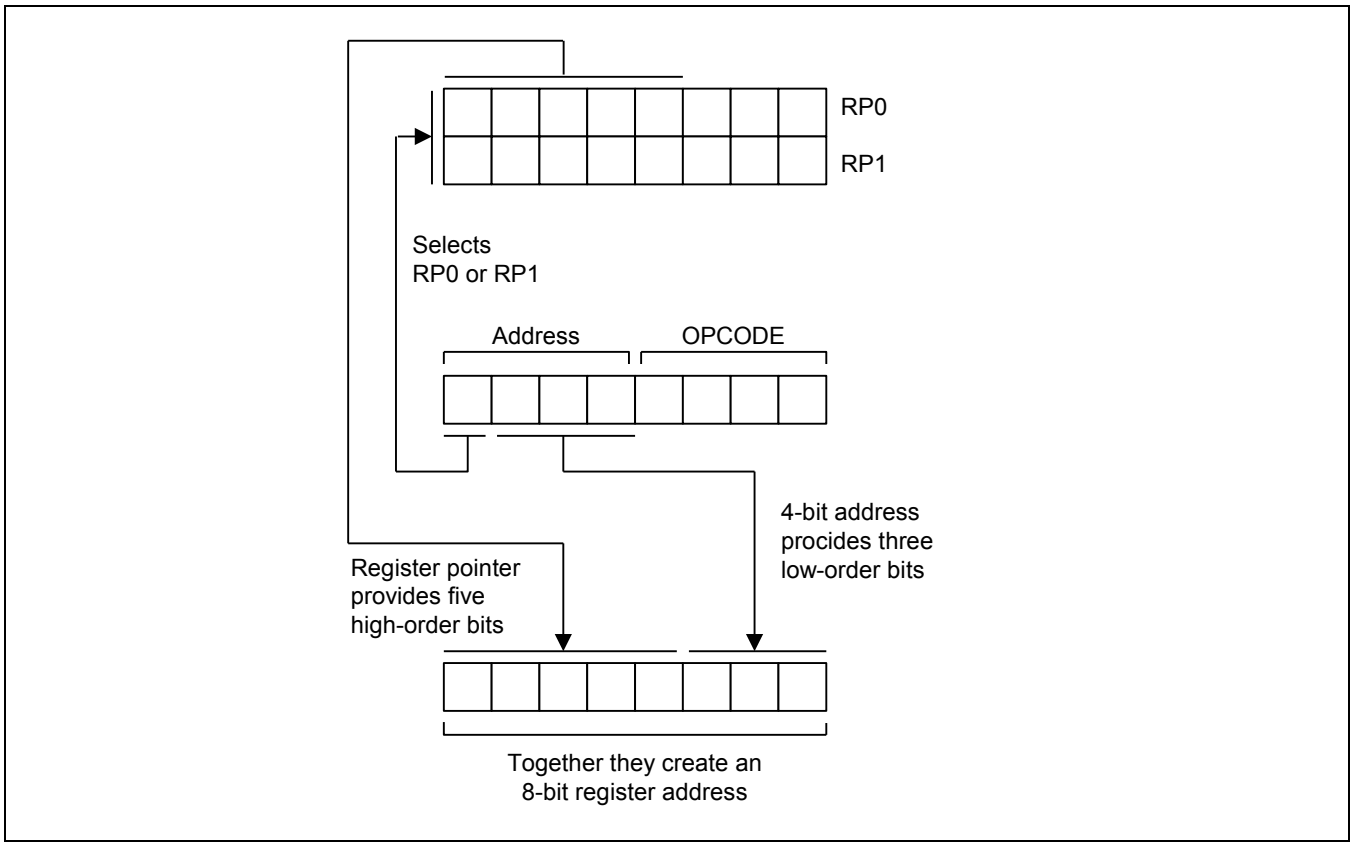

Figure 2-12 4-bit Working Register Addressing

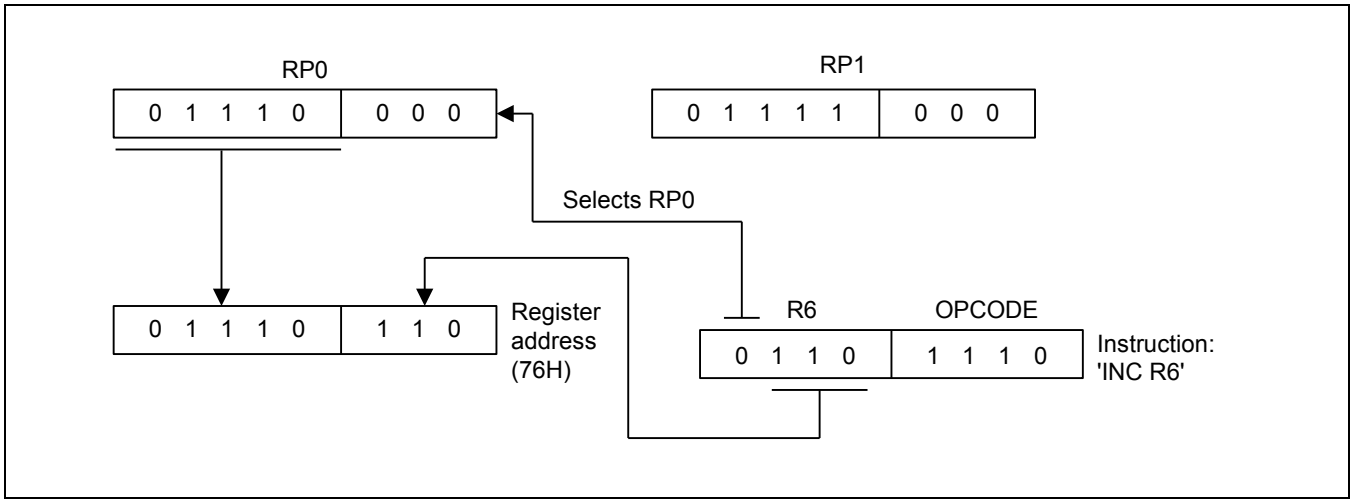

Figure 2-13 4-bit Working Register Addressing Example

2.4.3 8-bit Working Register Addressing

You can also use 8-bit working register addressing to access registers in a selected working register area. To initiate 8-bit working register addressing, the upper four bits of the instruction address must contain the value 1100B. This 4-bit value (1100B) indicates that the remaining four bits have the same effect as 4-bit working register addressing.

As shown in *Figure 2-13*, the lower nibble of the 8-bit address is concatenated in much the same way as for 4-bit addressing: Bit 3 selects either RP0 or RP1, which then supplies the five high-order bits of the final address. The three low-order bits of the complete address are provided by the original instruction.

Figure 2-14 shows an example of 8-bit working register addressing. The four high-order bits of the instruction address (1100B) specify 8-bit working register addressing. Bit 4 ("1") selects RP1 and the five high-order bits in RP1 (10101B) become the five high-order bits of the register address. The three low-order bits of the register address (011) are provided by the three low-order bits of the 8-bit instruction address. The five-address bits from RP1 and the three address bits from the instruction are concatenated to form the complete register address, 0ABH (10101011B).

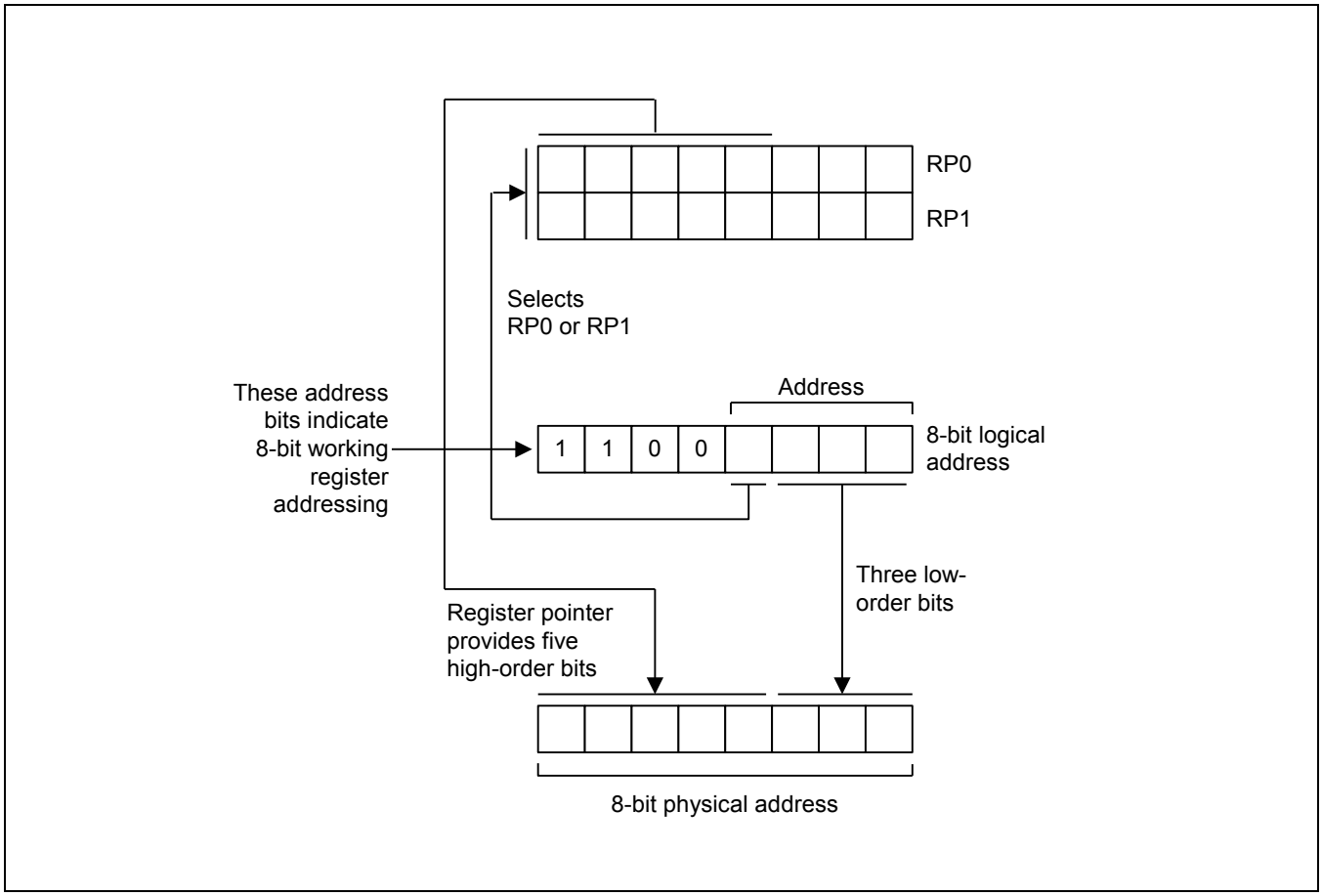

Figure 2-14 8-bit Working Register Addressing

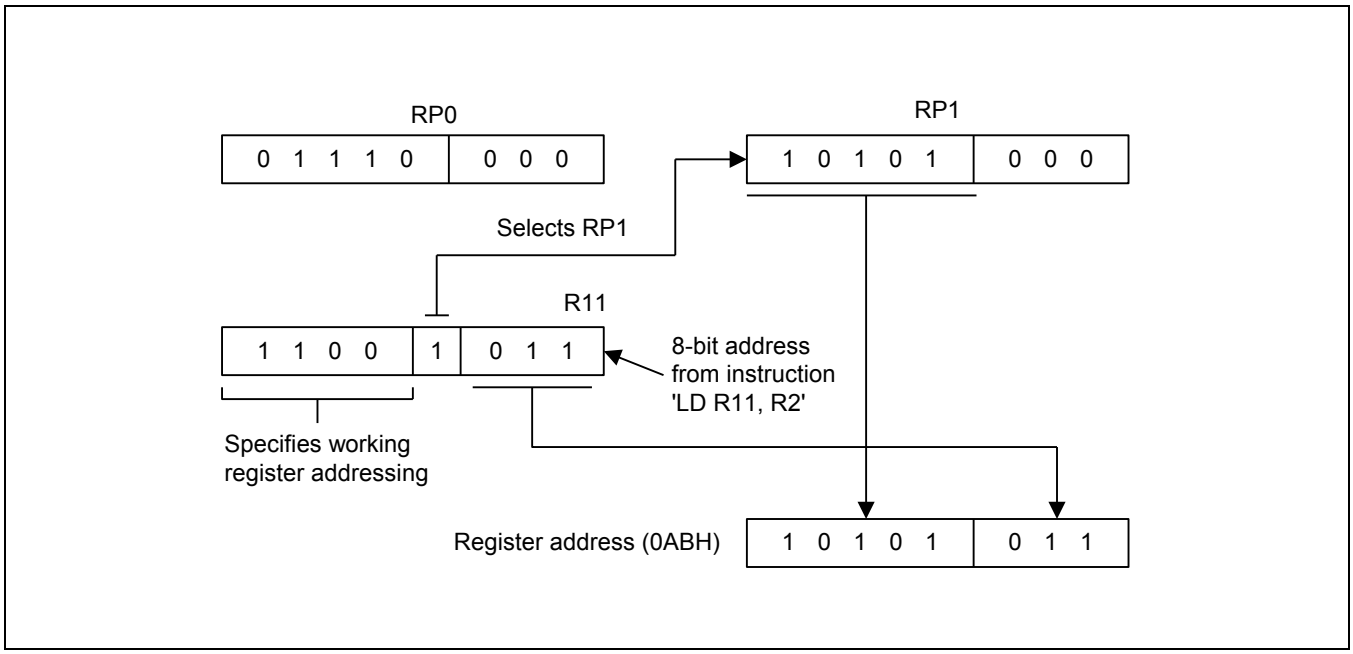

Figure 2-15 8-bit Working Register Addressing Example

2.5 System and User Stacks

S3C8-series microcontrollers use the system stack for subroutine calls and returns and to store data. The PUSH and POP instructions are used to control system stack operations. The S3F80Q5 architecture supports stack operations in the internal register file.

2.5.1 Stack Operations

Return addresses for procedure calls, interrupts and data are stored on the stack. The contents of the PC are saved to stack by a CALL instruction and restored by the RET instruction. When an interrupt occurs, the contents of the PC and the FLAGS registers are pushed to the stack. The IRET instruction then pops these values back to their original locations. The stack address value is always decreased by one before a push operation and increased by one after a pop operation. The stack pointer (SP) always points to the stack frame stored on the top of the stack, as shown in *Figure 2-16*.

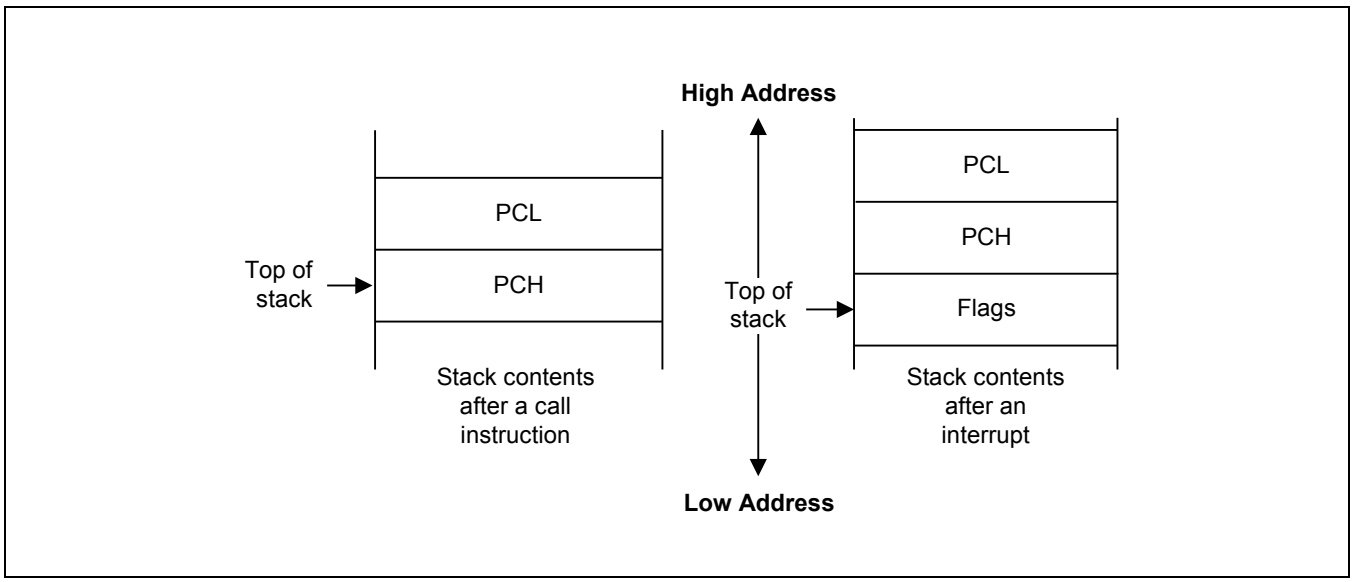

Figure 2-16 Stack Operations

2.5.1.1 User-Defined Stacks

You can freely define stacks in the internal register file as data storage locations. The instructions PUSHUI, PUSHUD, POPUI, and POPUD support user-defined stack operations.

2.5.1.2 Stack Pointers (SPL)

Register location D9H contains the 8-bit stack pointer (SPL) that is used for system stack operations. After a reset, the SPL value is undetermined. Because only internal memory 256 byte is implemented in The S3F80Q5, the SPL must be initialized to an 8-bit value in the range 00-FFH.

Example 2-4 Standard Stack Operations Using PUSH and POP

The following example shows you how to perform stack operations in the internal register file using PUSH and POP instructions:

```
LD      SPL, #0FFH      ; SPL ← FFH
                        ;(Normally, the SPL is set to 0FFH by the initialization routine)
•
•
•
PUSH    PP              ; Stack address 0FEH ← PP
PUSH    RP0             ; Stack address 0FDH ← RP0
PUSH    RP1             ; Stack address 0FCH ← RP1
PUSH    R3              ; Stack address 0FBH ← R3
•
•
•
POP     R3              ; R3   ← Stack address 0FBH
POP     RP1             ; RP1  ← Stack address 0FCH
POP     RP0             ; RP0  ← Stack address 0FDH
POP     PP              ; PP   ← Stack address 0FEH
```

3 Addressing Modes

3.1 Overview

The program counter is used to fetch instructions that are stored in program memory for execution. Instructions indicate the operation to be performed and the data to be operated on. Addressing mode is the method used to determine the location of the data operand. The operands specified in instructions may be condition codes, immediate data, or a location in the register file, program memory, or data memory.

The S3C8/S3F8-series instruction set supports seven explicit addressing modes.

Not all of these addressing modes are available for each instruction:

- Register (R)
- Indirect Register (IR)
- Indexed (X)
- Direct Address (DA)
- Indirect Address (IA)
- Relative Address (RA)
- Immediate (IM)

3.1.1 Register Addressing Mode (R)

In Register addressing mode, the operand is the content of a specified register or register pair; (see *Figure 3-1*). Working register addressing differs from Register addressing because it uses a register pointer to specify an 8 byte working register space in the register file and an 8-bit register within that space; (see *Figure 3-2*).

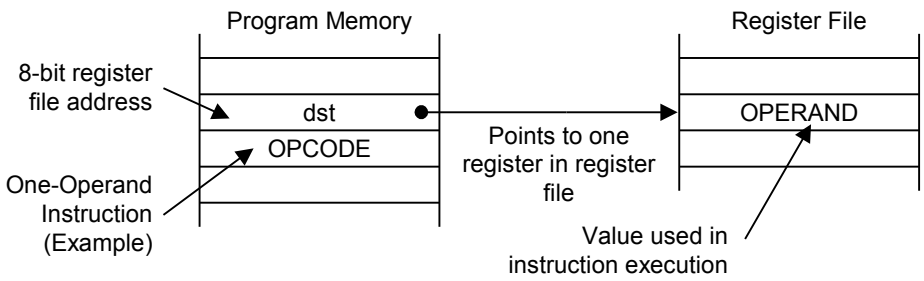

Sample Instruction:

DEC CNTR ; Where CNTR is the label of an 8-bit register address

Figure 3-1 Register Addressing

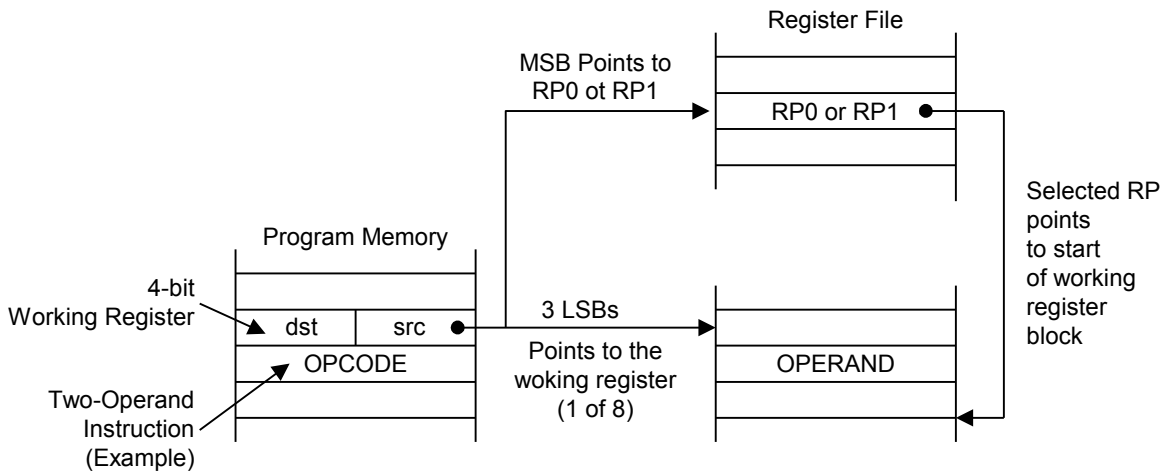

Sample Instruction:

ADD R1, R2 ; Where R1 and R2 are registers in the curruntly selected working register area.

Figure 3-2 Working Register Addressing

3.1.2 Indirect Register Addressing Mode (IR)

In Indirect Register (IR) addressing mode, the content of the specified register or register pair is the address of the operand. Depending on the instruction used, the actual address may point to a register in the register file, to program memory (ROM), or to an external memory space, if implemented; (see *Figure 3-3* through *Figure 3-6*).

You can use any 8-bit register to indirectly address another register. Any 16-bit register pair can be used to indirectly address another memory location. Remember, however, that locations C0H–FFH in set 1 cannot be accessed using Indirect Register addressing mode.

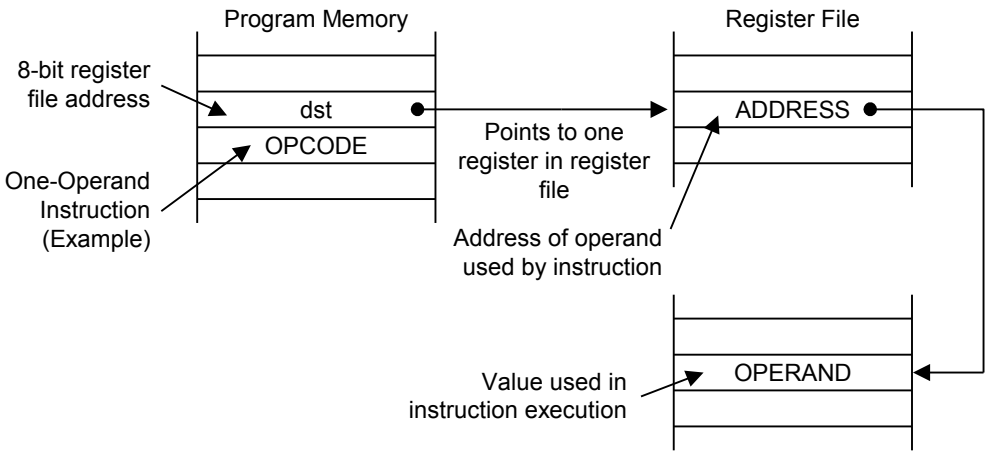

Sample Instruction:

```
RL      @SHIFT      ;   Where SHIFT is the label of an 8-bit register address.
```

Figure 3-3 Indirect Register Addressing to Register File

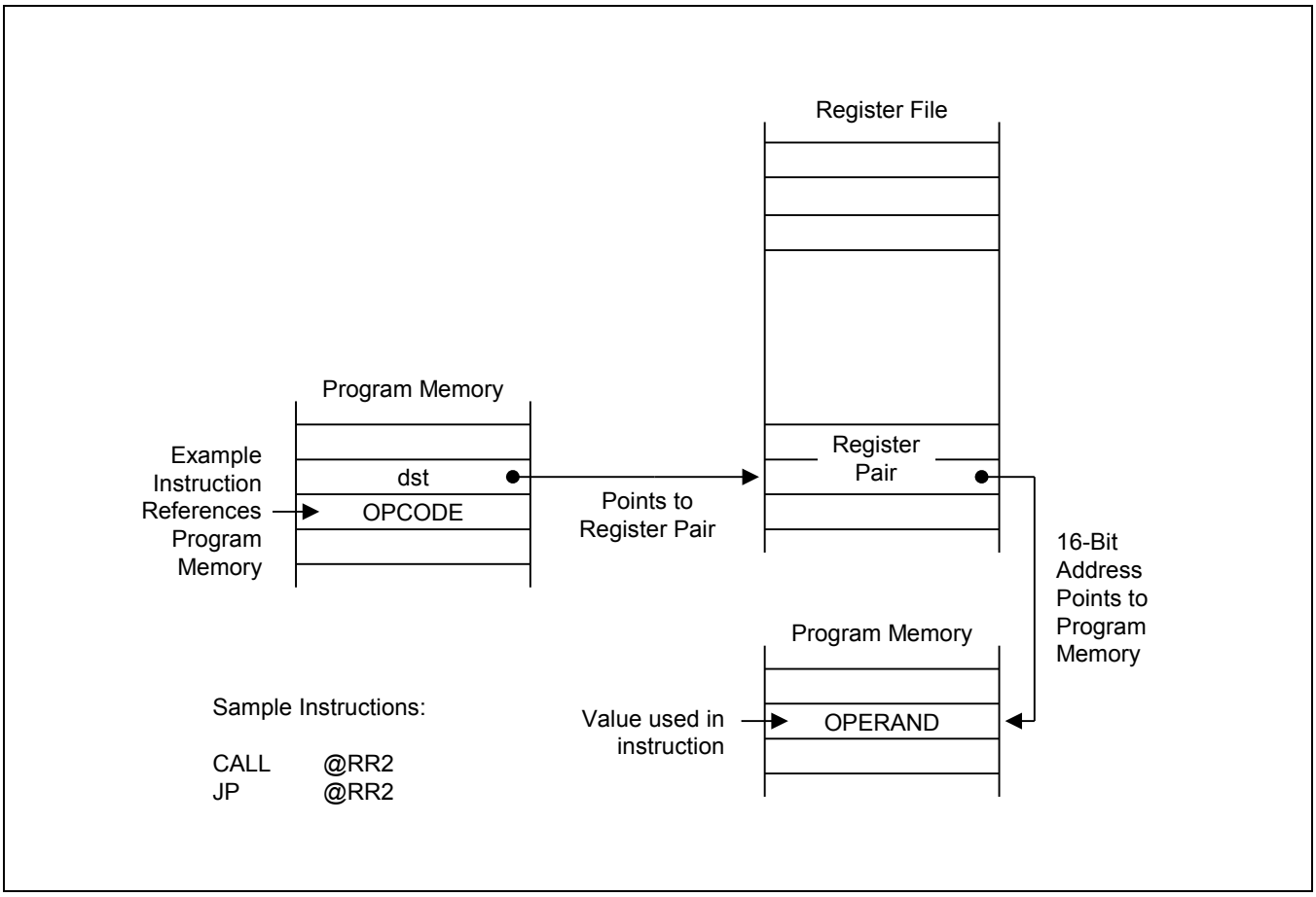

Figure 3-4 Indirect Register Addressing to Program Memory

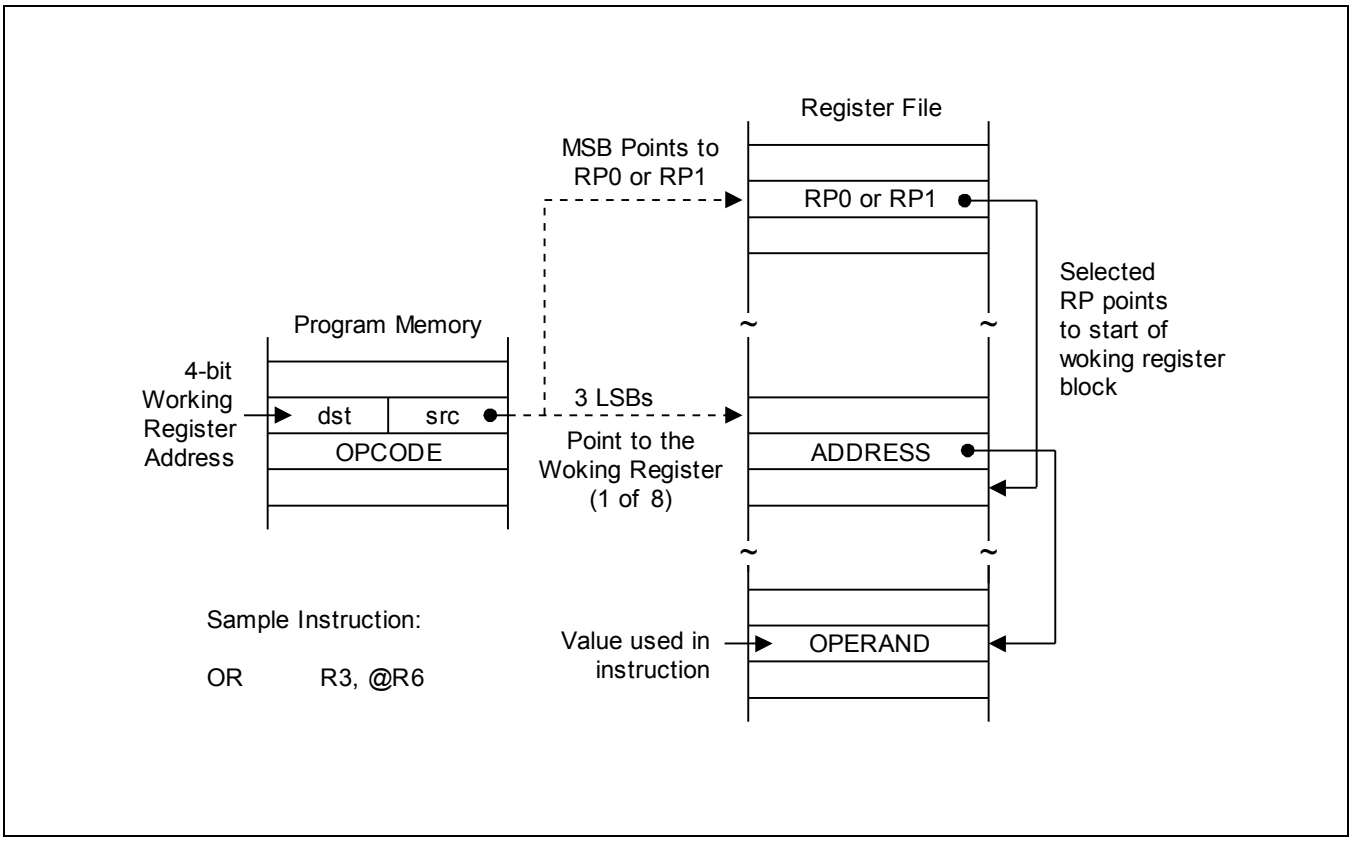

Figure 3-5 Indirect Working Register Addressing to Register File

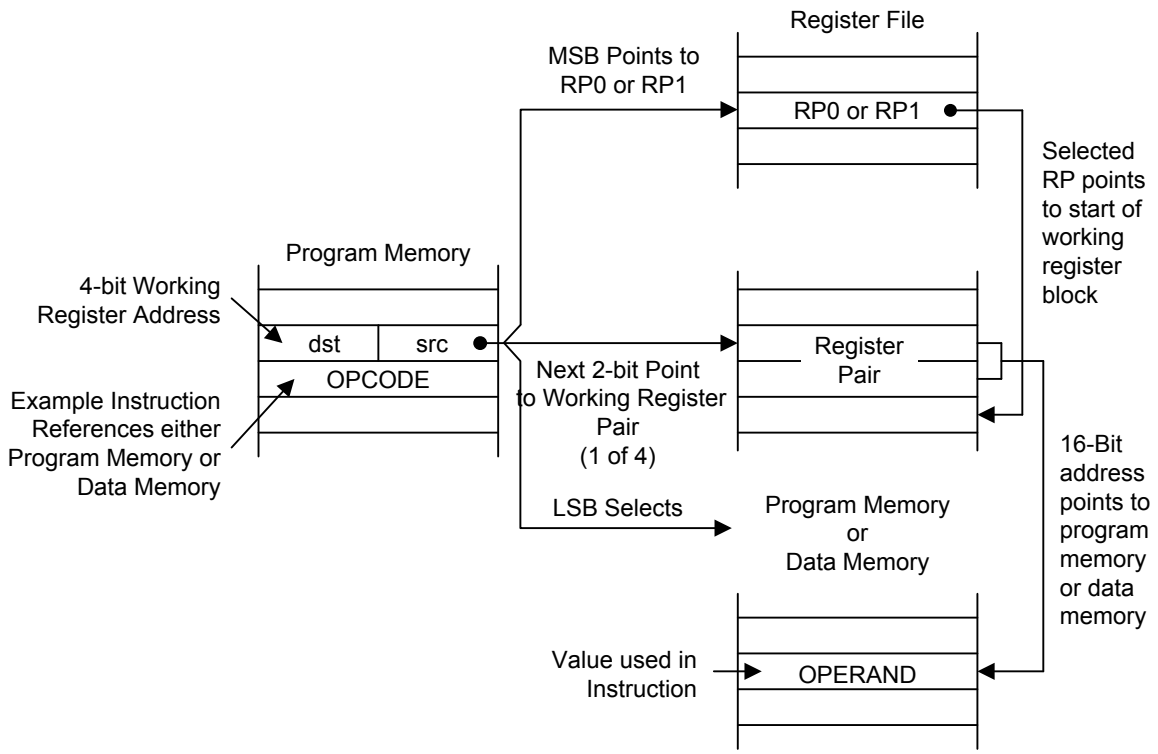

Sample Instructions:

```
LCD     R5,@RR6       ;  Program memory access
LDE     R3,@RR14      ;  External data memory access
LDE     @RR4, R8      ;  External data memory access
```

NOTE: LDE command is not available, because an external interface is not implemented for the S3F80Q5.

Figure 3-6 Indirect Working Register Addressing to Program or Data Memory

3.1.3 Indexed Addressing Mode (X)

Indexed (X) addressing mode adds an offset value to a base address during instruction execution in order to calculate the effective operand address; (see *Figure 3-7*). You can use Indexed addressing mode to access locations in the internal register file or in external memory (if implemented). You cannot, however, access locations C0H–FFH in set 1 using indexed addressing.

In short offset Indexed addressing mode, the 8-bit displacement is treated as a signed integer in the range – 128 to + 127. This applies to external memory accesses only; (see *Figure 3-8*).

For register file addressing, an 8-bit base address provided by the instruction is added to an 8-bit offset contained in a working register. For external memory accesses, the base address is stored in the working register pair designated in the instruction. The 8-bit or 16-bit offset given in the instruction is then added to the base address; (see *Figure 3-9*).

The only instruction that supports indexed addressing mode for the internal register file is the Load instruction (LD). The LDC and LDE instructions support indexed addressing mode for internal program memory and for external data memory (if implemented).

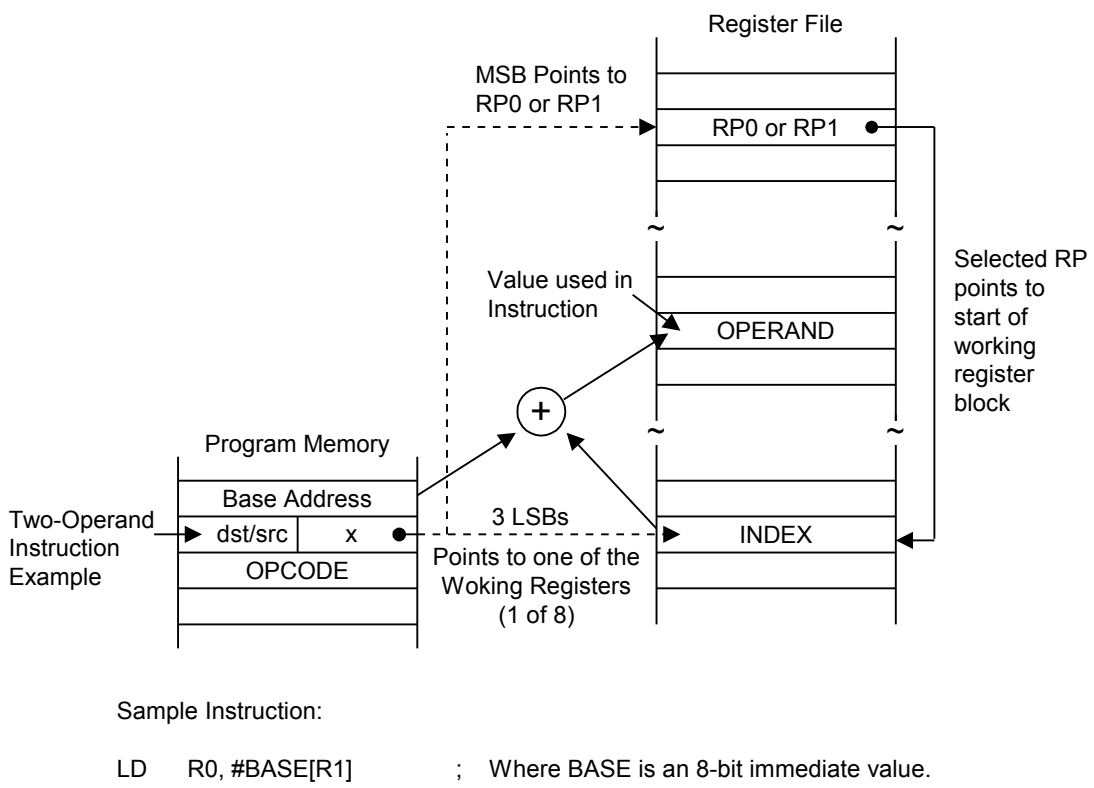

Sample Instruction:

LD R0, #BASE[R1] ; Where BASE is an 8-bit immediate value.

Figure 3-7 Indexed Addressing to Register File

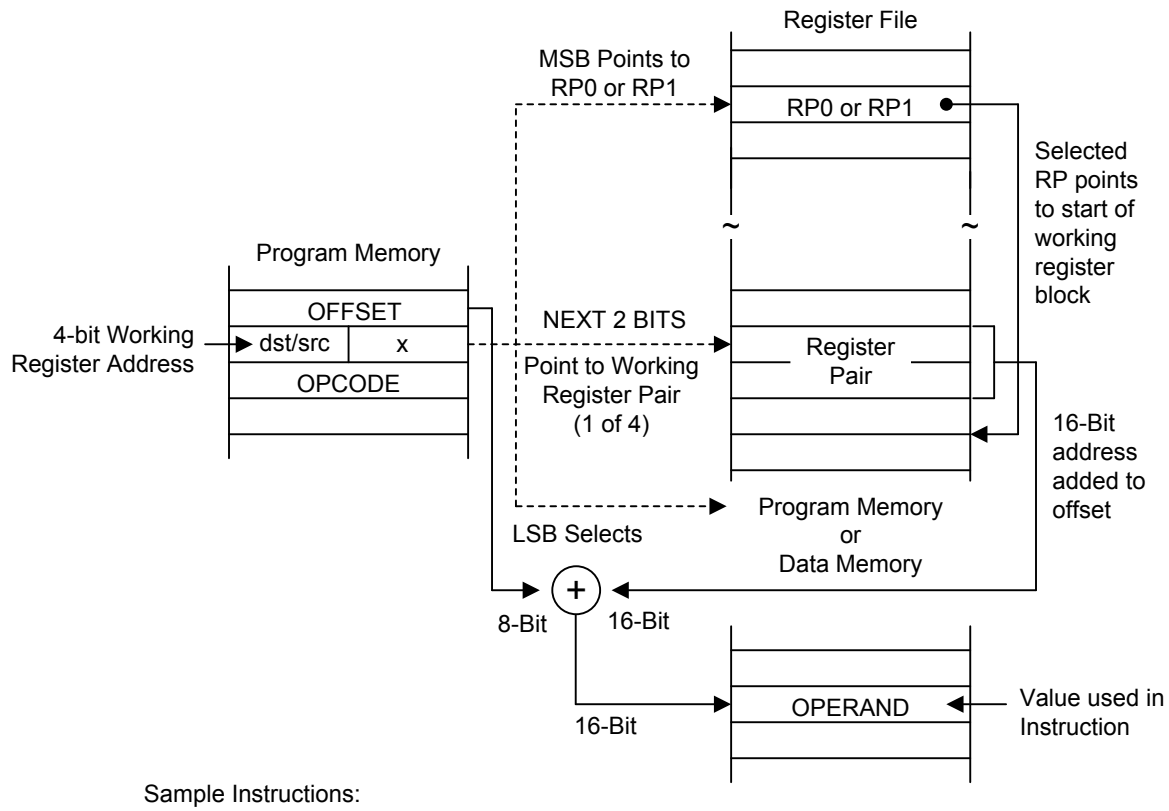

Sample Instructions:

LDC	R4, #04H[RR2]	;	The values in the program address (RR2 + 04H) are loaded into register R4.
LDE	R4,#04H[RR2]	;	Identical operation to LDC example, except that external data memory is accessed.

NOTE: LDE command is not available, because an external interface is not implemented for the S3F80Q5.

Figure 3-8 Indexed Addressing to Program or Data Memory with Short Offset

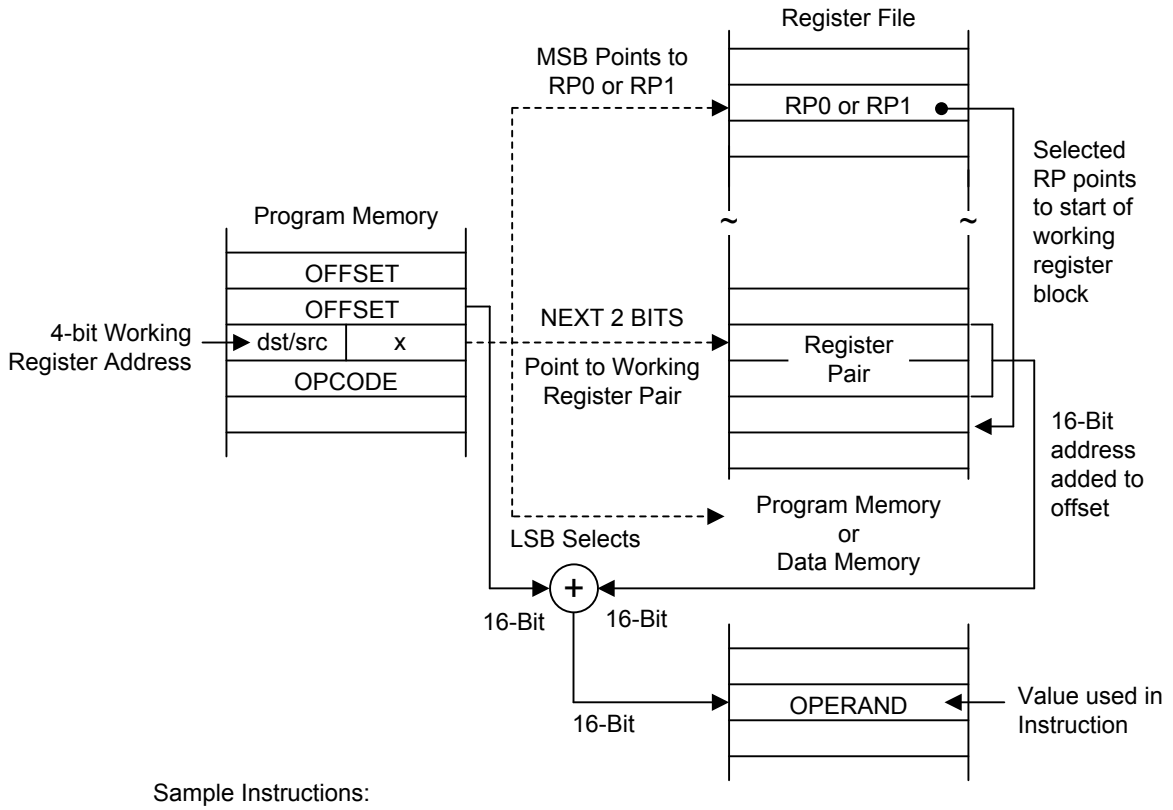

Sample Instructions:

LDC	R4, #1000H[RR2]	;	The values in the program address (RR2 + 1000H) are loaded into register R4.
LDE	R4,#1000H[RR2]	;	Identical operation to LDC example, except that external data memory is accessed.

NOTE: LDE command is not available, because an external interface is not implemented for the S3F80Q5.

Figure 3-9 Indexed Addressing to Program or Data Memory

3.1.4 Direct Address Mode (DA)

In Direct Address (DA) mode, the instruction provides the operand's 16-bit memory address. Jump (JP) and Call (CALL) instructions use this addressing mode to specify the 16-bit destination address that is loaded into the PC whenever a JP or CALL instruction is executed.

The LDC and LDE instructions can use Direct Address mode to specify the source or destination address for Load operations to program memory (LDC) or to external data memory (LDE), if implemented.

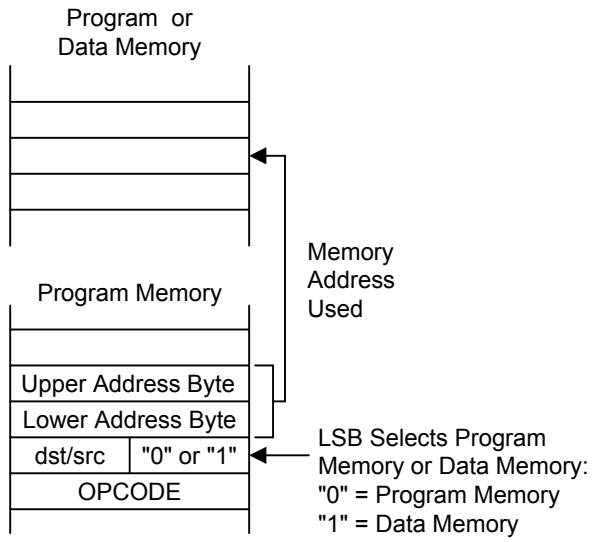

Sample Instructions:

LDC	R5,1234H	;	The values in the program address (1234H) are loaded into register R5.
LDE	R5,1234H	;	Identical operation to LDC example, except that external data memory is accessed.

NOTE: LDE command is not available, because an external interface is not implemented for the S3F80Q5.

Figure 3-10 Direct Addressing for Load Instructions

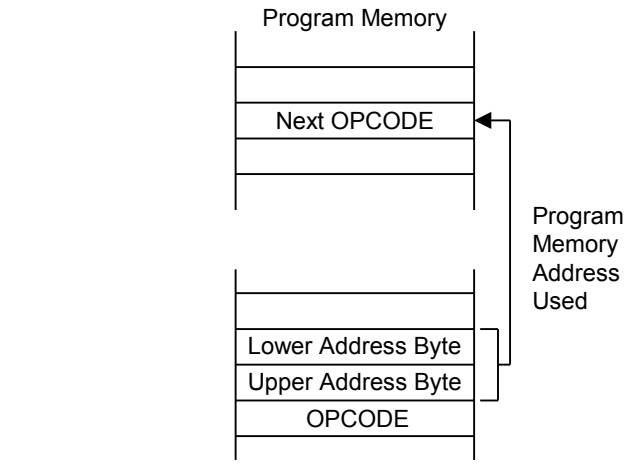

Sample Instructions:

```
JP      C,JOB1      ;  Where JOB1 is a 16-bit immediate address
CALL    DISPLAY     ;  Where DISPLAY is a 16-bit immediate address
```

Figure 3-11 Direct Addressing for Call and Jump Instructions

3.1.5 Indirect Address Mode (IA)

In Indirect Address (IA) mode, the instruction specifies an address located in the lowest 256 bytes of the program memory. The selected pair of memory locations contains the actual address of the next instruction to be executed. Only the CALL instruction can use the Indirect Address mode.

Because the Indirect Address mode assumes that the operand is located in the lowest 256 bytes of program memory, only an 8-bit address is supplied in the instruction; the upper bytes of the destination address are assumed to be all zeros.

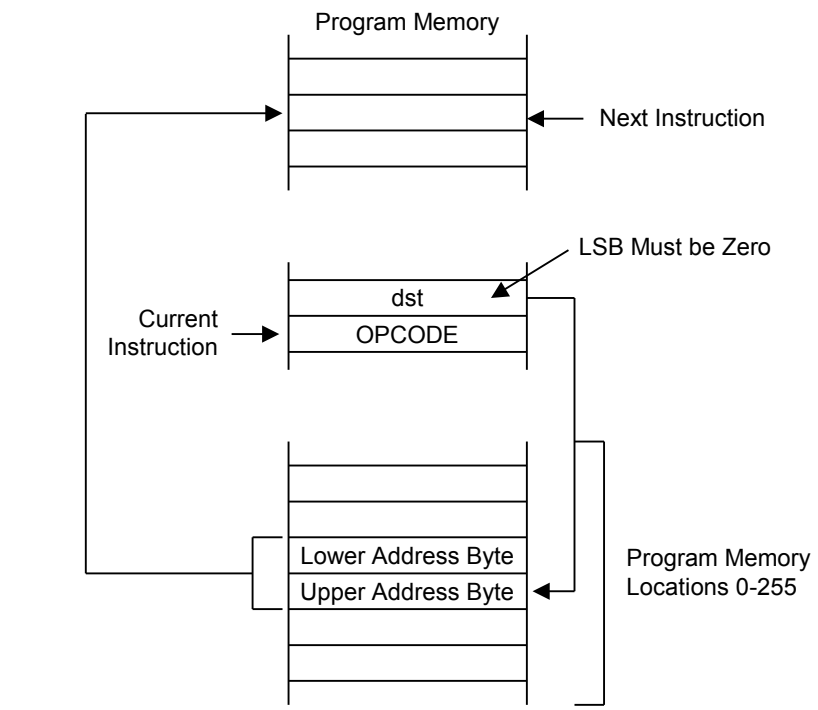

Sample Instruction:

```
CALL    #40H        ; The 16-bit value in program memory addresses 40H
                      and 41H is the subroutine start address.
```

Figure 3-12 Indirect Addressing

3.1.6 Relative Address Mode (RA)

In Relative Address (RA) mode, a two's-complement signed displacement between – 128 and + 127 is specified in the instruction. The displacement value is then added to the current PC value. The result is the address of the next instruction to be executed. Before this addition occurs, the PC contains the address of the instruction immediately following the current instruction.

Several program control instructions use the Relative Address mode to perform conditional jumps. The instructions that support RA addressing are BTJRF, BTJRT, DJNZ, CPIJE, CPIJNE, and JR.

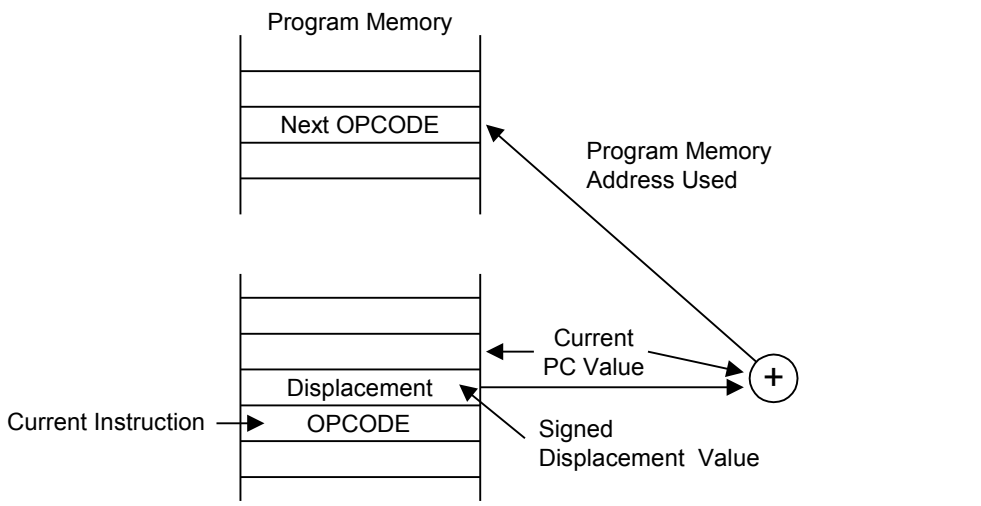

Sample Instructions:

```
JR      ULT,$+OFFSET      ;   Where OFFSET is a value in the range +127 to -128
```

Figure 3-13 Relative Addressing

3.1.7 Immediate Mode (IM)

In Immediate (IM) mode, the operand value used in the instruction is the value supplied in the operand field itself. The operand may be one byte or one word in length, depending on the instruction used. Immediate addressing mode is useful for loading constant values into registers.

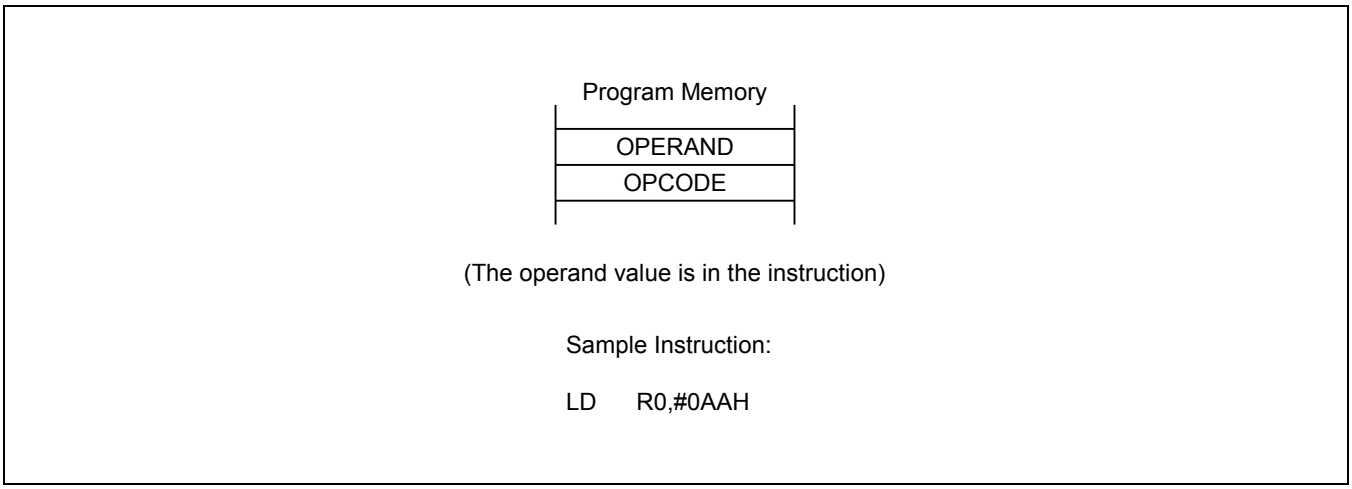

Figure 3-14 Immediate Addressing

4 Control Registers

4.1 Overview

In this section, detailed descriptions of the S3F80Q5 control registers are presented in an easy-to-read format. You can use this section as a quick-reference source when writing application programs. *Figure 4-1* illustrates the important features of the standard register description format.

Control register descriptions are arranged in alphabetical order (A to Z) according to the register mnemonic. More detailed information about control registers is presented in the context of the specific peripheral hardware descriptions in Part II of this manual.

Data and counter registers are not described in detail in this reference section. More information about all of the registers used by a specific peripheral is presented in the corresponding peripheral descriptions in Part II of this manual.

4.2 Register Map Summary

Table 4-1 Mapped Registers (Bank 0, Set 1)

Register Name	Mnemonic	Decimal	Hex	R/W
Timer 0 Counter	T0CNT	208	D0H	R (NOTE)
Timer 0 Data Register	T0DATA	209	D1H	R/W
Timer 0 Control Register	T0CON	210	D2H	R/W
Basic Timer Control Register	BTCON	211	D3H	R/W
Clock Control Register	CLKCON	212	D4H	R/W
System Flags Register	FLAGS	213	D5H	R/W
Register Pointer 0	RP0	214	D6H	R/W
Register Pointer 1	RP1	215	D7H	R/W
Location D8H is not mapped				
Stack Pointer (Low Byte)	SPL	217	D9H	R/W
Instruction Pointer (High Byte)	IPH	218	DAH	R/W
Instruction Pointer (Low Byte)	IPL	219	DBH	R/W
Interrupt Request Register	IRQ	220	DCH	R (NOTE)
Interrupt Mask Register	IMR	221	DDH	R/W
System Mode Register	SYM	222	DEH	R/W
Register Page Pointer	PP	223	DFH	R/W
Port 0 Data Register	P0	224	E0H	R/W
Port 1 Data Register	P1	225	E1H	R/W
Port 2 Data Register	P2	226	E2H	R/W
Port 3 Data Register	P3	227	E3H	R/W
Reserved E4H				
Port 2 Interrupt Enable Register	P2INT	229	E5H	R/W
Port 2 Interrupt Pending Register	P2PND	230	E6H	R/W
Port 0 Pull-up Resistor Enable Register	P0PUR	231	E7H	R/W
Port 0 Control Register (High Byte)	P0CONH	232	E8H	R/W
Port 0 Control Register (Low Byte)	P0CONL	233	E9H	R/W
Port 1 Control Register (High Byte)	P1CONH	234	EAH	R/W
Port 1 Control Register (Low Byte)	P1CONL	235	EBH	R/W
Reserved ECH				
Port 2 Control Register (Low Byte)	P2CONL	237	EDH	R/W
Port 2 Pull-up Enable Register	P2PUR	238	EEH	R/W
Port 3 Control Register	P3CON	239	EFH	R/W
Reserved F0H				
Port 0 Interrupt Enable Register	P0INT	241	F1H	R/W
Port 0 Interrupt Pending Register	P0PND	242	F2H	R/W
Counter A Control Register	CACON	243	F3H	R/W
Counter A Data Register (High Byte)	CADATAH	244	F4H	R/W

Register Name	Mnemonic	Decimal	Hex	R/W
Counter A Data Register (Low Byte)	CADATAL	245	F5H	R/W
Timer 1 Counter Register (High Byte)	T1CNTH	246	F6H	R (NOTE)
Timer 1 Counter Register (Low Byte)	T1CNTL	247	F7H	R (NOTE)
Timer 1 Data Register (High Byte)	T1DATAH	248	F8H	R/W
Timer 1 Data Register (Low Byte)	T1DATAL	249	F9H	R/W
Timer 1 Control Register	T1CON	250	FAH	R/W
STOP Control Register	STOPCON	251	FBH	W
Location FCH is not mapped				
Basic Timer Counter	BTCNT	253	FDH	R (NOTE)
External Memory Timing Register	EMT	254	FEH	R/W
Interrupt Priority Register	IPR	255	FFH	R/W

NOTE: You cannot use a read-only register as a destination for the instructions OR, AND, LD, or LDB.

Table 4-2 Mapped Registers (Bank 1, Set 1)

Register Name	Mnemonic	Decimal	Hex	R/W
LVD Control Register	LVDCON	224	E0H	R/W
Reserved E1H				
Reserved E2H				
Reserved E3H				
Timer 2 Counter Register (High Byte)	T2CNTH	228	E4H	R (NOTE)
Timer 2 Counter Register (Low Byte)	T2CNTL	229	E5H	R (NOTE)
Timer 2 Data Register (High Byte)	T2DATAH	230	E6H	R/W
Timer 2 Data Register (Low Byte)	T2DATAL	231	E7H	R/W
Timer 2 Control Register	T2CON	232	E8H	R/W
SPI Control Register	SPICON	233	E9H	R/W
SPI Status Register	SPISTAT	234	EAH	R/W
SPI Data Register	SPIDATA	235	EBH	R/W
Flash Memory Sector Address Register (High Byte)	FMSECH	236	ECH	R/W
Flash Memory Sector Address Register (Low Byte)	FMSECL	237	EDH	R/W
Flash Memory User Programming Enable Register	FMUSR	238	EEH	R/W
Flash Memory Control Register	FMCON	239	EFH	R/W
Reset Indicating Register	RESETID	240	F0H	R/W
LVD Flag Selection Register	LVDSEL	241	F1H	R/W
PORT1 Output Mode Pull-up Enable Register	P1OUTPU	242	F2H	R/W
PORT2 Output Mode Selection Register	P2OUTMD	243	F3H	R/W
PORT3 Output Mode Pull-up Enable Register	P3OUTPU	244	F4H	R/W
Not mapped in address F5H				
FRT Counter Register 2	FRTCNT2	246	F6H	R (NOTE)
FRT Counter Register 1	FRTCNT1	247	F7H	R (NOTE)
FRT Counter Register 0	FRTCNT0	248	F8H	R (NOTE)
FRT Data Register 2	FRTDATA2	249	F9H	R/W
FRT Data Register 1	FRTDATA1	250	FAH	R/W
FRT Data Register 0	FRTDATA0	251	FBH	R/W
FRT Control Register	FRTCON	252	FCH	R/W
Not mapped in address FDH to 0FFH				

NOTE: You cannot use a read-only register as a destination for the instructions OR, AND, LD, or LDB.

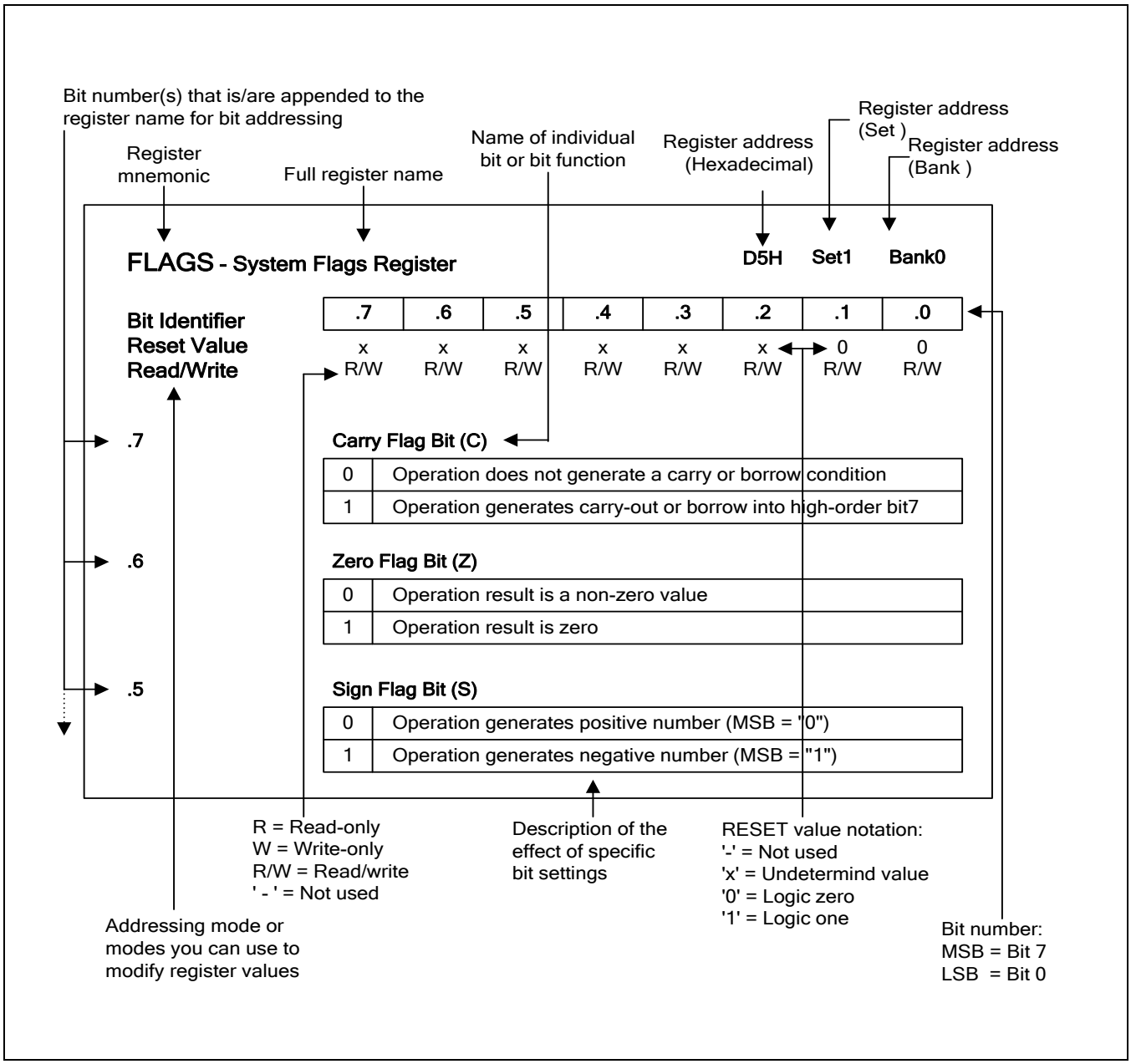

Figure 4-1 Register Description Format

4.2.1 BTCON: Basic Timer Control Register (D3H, Set1, Bank0)

Bit Identifier	.7	.6	.5	.4	.3	.2	.1	.0
Reset Value	0	0	0	0	0	0	0	0
Read/Write	R/W	R/W	R/W	R/W	R/W	R/W	R/W	R/W
Addressing Mode	Register addressing mode only							

.7–.4 **Watchdog Timer Function Enable Bits (for System Reset)**

1	0	1	0	Disable watchdog timer function
Any other value				Enable watchdog timer function

.3 and .2 **Basic Timer Input Clock Selection Bits**

0	0	$f_{OSC}/4096$
0	1	$f_{OSC}/1024$
1	0	$f_{OSC}/128$
1	1	$f_{OSC}/16384$

.1 **Basic Timer Counter Clear Bit** (1)

0	No effect
1	Clear the basic timer counter value

.0 **Clock Frequency Divider Clear Bit for Basic Timer and Timer 0** (2)

0	No effect
1	Clear both block frequency dividers

NOTE:

1. When you write a "1" to BTCON.1, the basic timer counter value is cleared to "00H". Immediately following the write operation, the BTCON.1 value is automatically cleared to "0".
2. When you write a "1" to BTCON.0, the corresponding frequency divider is cleared to "00H". Immediately following the write operation, the BTCON.0 value is automatically cleared to "0".

4.2.2 CACON: Counter A Control Register (F3H, Set1, Bank0)

Bit Identifier	.7	.6	.5	.4	.3	.2	.1	.0
Reset Value	0	0	0	0	0	0	0	0
Read/Write	R/W	R/W	R/W	R/W	R/W	R/W	R/W	R/W
Addressing Mode	Register addressing mode only							

.7 and .6 **Counter A Input Clock Selection Bits**

0	0	f_{OSC}
0	1	$f_{OSC}/2$
1	0	$f_{OSC}/4$
1	1	$f_{OSC}/8$

.5 and .4 **Counter A Interrupt Timing Selection Bits**

0	0	Elapsed time for Low data value
0	1	Elapsed time for High data value
1	0	Elapsed time for combined Low and High data values
1	1	Not used for S3F80Q5

.3 **Counter A Interrupt Enable Bit**

0	Disable interrupt
1	Enable interrupt

.2 **Counter A Start Bit**

0	Stop counter A
1	Start counter A

.1 **Counter A Mode Selection Bit**

0	One-shot mode
1	Repeating mode

.0 **Counter A Output Flip-Flop Control Bit**

0	Flip-Flop Low level (T-FF = Low)
1	Flip-flop High level (T-FF = High)

4.2.3 CLKCON: System Clock Control Register (D4H, Set1, Bank0)

Bit Identifier	.7	.6	.5	.4	.3	.2	.1	.0
Reset Value	0	0	0	0	0	0	0	0
Read/Write	R/W	R/W	R/W	R/W	R/W	R/W	R/W	R/W
Addressing Mode	Register addressing mode only							

.7– .5

Not used for S3F80Q5

.4 and .3

CPU Clock (System Clock) Selection Bits (1)

0	0	$f_{OSC}/16$
0	1	$f_{OSC}/8$
1	0	$f_{OSC}/2$
1	1	f_{OSC} (non-divided)

.2– .0

Subsystem Clock Selection Bits (2)

1	0	1	Not used for S3F80Q5
Other value			Select main system clock (MCLK)

NOTE:

1. After a reset, the slowest clock (divided by 16) is selected as the system clock. To select faster clock speeds, load the appropriate values to CLKCON.3 and CLKCON.4.
2. These selection bits CLKCON.0, .1, .2 are required only for systems that have a main clock and a subsystem clock. The S3F80Q5 uses only the main oscillator clock circuit. For this reason, the setting "101B" is invalid.

4.2.4 EMT: External Memory Timing Register (NOTE) (FEH, Set1, Bank0)

Bit Identifier	.7	.6	.5	.4	.3	.2	.1	.0
Reset Value	0	1	1	1	1	1	0	–
Read/Write	R/W	R/W	R/W	R/W	R/W	R/W	R/W	–
Addressing Mode	Register addressing mode only							

.7 **External WAIT Input Function Enable Bit**

0	Disable WAIT input function for external device
1	Enable WAIT input function for external device

.6 **Slow Memory Timing Enable Bit**

0	Disable slow memory timing
1	Enable slow memory timing

.5 and .4 **Program Memory Automatic Wait Control Bits**

0	0	No wait
0	1	Wait one cycle
1	0	Wait two cycles
1	1	Wait three cycles

.3 and .2 **Data Memory Automatic Wait Control Bits**

0	0	No wait
0	1	Wait one cycle
1	0	Wait two cycles
1	1	Wait three cycles

.1 **Stack Area Selection Bit**

0	Select internal register file area
1	Select external data memory area

.0

Not used for S3F80Q5

NOTE: The EMT register is not used for S3F80Q5, because an external peripheral interface is not implemented in the S3F80Q5. The program initialization routine should clear the EMT register to "00H" following a reset. Modification of EMT values during normal operation may cause a system malfunction.

4.2.5 FLAGS: System Flags Register (D5H, Set1, Bank0)

Bit Identifier	.7	.6	.5	.4	.3	.2	.1	.0
Reset Value	x	x	x	x	x	x	0	0
Read/Write	R/W	R/W	R/W	R/W	R/W	R/W	R	R/W
Addressing Mode	Register addressing mode only							

.7 Carry Flag Bit (C)

0	Operation does not generate a carry or borrow condition
1	Operation generates a carry-out or borrow into high-order bit 7

.6 Zero Flag Bit (Z)

0	Operation result is a non-zero value
1	Operation result is zero

.5 Sign Flag Bit (S)

0	Operation generates a positive number (MSB = "0")
1	Operation generates a negative number (MSB = "1")

.4 Overflow Flag Bit (V)

0	Operation result is $\leq$ + 127 or $\geq$ – 128
1	Operation result is > + 127 or < – 128

.3 Decimal Adjust Flag Bit (D)

0	Add operation completed
1	Subtraction operation completed

.2 Half-Carry Flag Bit (H)

0	No carry-out of bit 3 or no borrow into bit 3 by addition or subtraction
1	Addition generated carry-out of bit 3 or subtraction generated borrow into bit 3

.1 Fast Interrupt Status Flag Bit (FIS)

0	Interrupt return (IRET) in progress (when read)
1	Fast interrupt service routine in progress (when read)

.0 Bank Address Selection Flag Bit (BA)

0	Bank 0 is selected
1	Bank 1 is selected

4.2.6 FMCON: Flash Memory Control Register (EFH, Set1, Bank1)

Bit Identifier	.7	.6	.5	.4	.3	.2	.1	.0
Reset Value	0	0	0	0	–	–	–	0
Read/Write	R/W	R/W	R/W	R/W	–	–	–	R/W
Addressing Mode	Register addressing mode only							

.7–.4 **Flash Memory Mode Selection Bits**

0	1	0	1	Programming mode
1	0	1	0	Erase mode
0	1	1	0	Hard Lock mode (NOTE)
Others				Not used for S3F80Q5

.3–.1

Not used for S3F80Q5

.0 **Flash operation Start Bit (available for Erase and Hard Lock mode only)**

0	Operation stop
1	Operation start (auto clear bit)

NOTE: Hard Lock mode is one of the Flash protection modes. Refer to page 14-17.

4.2.7 FMSECH: Flash Memory Sector Address Register (High Byte) (ECH, Set1, Bank1)

Bit Identifier	.7	.6	.5	.4	.3	.2	.1	.0
Reset Value	0	0	0	0	0	0	0	0
Read/Write	R/W	R/W	R/W	R/W	R/W	R/W	R/W	R/W
Addressing Mode	Register addressing mode only							

.7–.0 **Flash Memory Sector Address (High Byte)**

NOTE: The high-byte Flash memory sector address pointer value is the higher eight bits of the 16-bit pointer address.

4.2.8 FMSECL: Flash Memory Sector Address Register (Low Byte) (EDH, Set1, Bank1)

Bit Identifier	.7	.6	.5	.4	.3	.2	.1	.0
Reset Value	0	0	0	0	0	0	0	0
Read/Write	R/W	R/W	R/W	R/W	R/W	R/W	R/W	R/W
Addressing Mode	Register addressing mode only							

.7–.0 **Flash Memory Sector Address (Low Byte)**

NOTE: The low-byte Flash memory sector address pointer value is the lower eight bits of the 16-bit pointer address.

4.2.9 FMUSR: Flash Memory User Programming Enable Register (EEH, Set1, Bank1)

Bit Identifier	.7	.6	.5	.4	.3	.2	.1	.0
Reset Value	0	0	0	0	0	0	0	0
Read/Write	R/W	R/W	R/W	R/W	R/W	R/W	R/W	R/W
Addressing Mode	Register addressing mode only							

.7–.0 **Flash Memory User Programming Enable Bits**

1	0	1	0	0	1	0	1	Enable user programming mode
Other values								Disable user programming mode

NOTE:
1. To enable Flash memory user programming, write 10100101B to FMUSR.
2. To disable Flash memory operation, write other value except 10100101B into FMUSR.

4.2.10 FRTCON: FRT Control Register (FCH, Set1, Bank1)

Bit Identifier	.7	.6	.5	.4	.3	.2	.1	.0
Reset Value	0	0	0	0	0	0	0	0
Read/Write	RW	RW	RW	RW	RW	RW	RW	RW
Addressing Mode	Register addressing mode only							

.7 **Internal OSC turn ON/OFF Bits**

0	Internal OSC turn OFF
1	Internal OSC turn ON (1)

.6

Not used for S3F80Q5

.5–.4 **FRT Input Clock Selection Bits**

0	0	IOSC
0	1	IOSC/2
1	0	IOSC/4
1	1	IOSC/16

.3 **FRT Counter Clear Bit**

0	No effect
1	Clear the FRT Counter (when write)

.2

Not used for S3F80Q5

.1 **FRT Match Interrupt Enable Bit**

0	Disable FRT match interrupt
1	Enable FRT match interrupt

.0 **FRT Match Interrupt Pending Flag Bit**

0	No FRT match interrupt pending (When read)
0	Clear FRT match interrupt pending condition (When write)
1	FRT match interrupt is pending (When read)
1	No effect (When write)

NOTE:

1. Internal OSC needs max. 500 μs to start up.

4.2.11 IMR: Interrupt Mask Register (DDH, Set1, Bank0)

Bit Identifier	.7	.6	.5	.4	.3	.2	.1	.0
Reset Value	x	x	x	x	x	x	x	x
Read/Write	R/W	R/W	R/W	R/W	R/W	R/W	R/W	R/W
Addressing Mode	Register addressing mode only							

.7 **Interrupt Level 7 (IRQ7) Enable Bit; External Interrupts P0.7-P0.4**

0	Disable (mask)
1	Enable (un-mask)

.6 **Interrupt Level 6 (IRQ6) Enable Bit; External Interrupts P0.3-P0.0**

0	Disable (mask)
1	Enable (un-mask)

.5

Not used for S3F80Q5

.4 **Interrupt Level 4 (IRQ4) Enable Bit; External Interrupts P2.0**

0	Disable (mask)
1	Enable (un-mask)

.3 **Interrupt Level 3 (IRQ3) Enable Bit; Timer 2 Match or Overflow**

0	Disable (mask)
1	Enable (un-mask)

.2 **Interrupt Level 2 (IRQ2) Enable Bit; Counter A Interrupt**

0	Disable (mask)
1	Enable (un-mask)

.1 **Interrupt Level 1 (IRQ1) Enable Bit; Timer 1 Match or Overflow**

0	Disable (mask)
1	Enable (un-mask)

.0 **Interrupt Level 0 (IRQ0) Enable Bit; Timer 0 Match or Overflow**

0	Disable (mask)
1	Enable (un-mask)

4.2.12 IPH: Instruction Pointer (High Byte) (DAH, Set1, Bank0)

Bit Identifier	.7	.6	.5	.4	.3	.2	.1	.0
Reset Value	x	x	x	x	x	x	x	x
Read/Write	R/W	R/W	R/W	R/W	R/W	R/W	R/W	R/W
Addressing Mode	Register addressing mode only							

.7–.1 **Instruction Pointer Address (High Byte)**

The high-byte instruction pointer value is the upper eight bits of the 16-bit instruction pointer address (IP15-IP8). The lower byte of the IP address is located in the IPL register (DBH).

4.2.13 IPL: Instruction Pointer (Low Byte) (DBH, Set1, Bank0)

Bit Identifier	.7	.6	.5	.4	.3	.2	.1	.0
Reset Value	x	x	x	x	x	x	x	x
Read/Write	R/W	R/W	R/W	R/W	R/W	R/W	R/W	R/W
Addressing Mode	Register addressing mode only							

.7–.0 **Instruction Pointer Address (Low Byte)**

The low-byte instruction pointer value is the lower eight bits of the 16-bit instruction pointer address (IP7-IP0). The upper byte of the IP address is located in the IPH register (DAH).

4.2.14 IPR: Interrupt Priority Register (FFH, Set1, Bank0)

Bit Identifier	.7	.6	.5	.4	.3	.2	.1	.0
Reset Value	x	x	x	x	x	x	x	x
Read/Write	R/W	R/W	R/W	R/W	R/W	R/W	R/W	R/W
Addressing Mode	Register addressing mode only							

.7, .4, and .1 **Priority Control Bits for Interrupt Groups A, B, and C**

0	0	0	Group priority undefined
0	0	1	B > C > A
0	1	0	A > B > C
0	1	1	B > A > C
1	0	0	C > A > B
1	0	1	C > B > A
1	1	0	A > C > B
1	1	1	Group priority undefined

.6 **Interrupt Subgroup C Priority Control Bit**

0	IRQ6 > IRQ7
1	IRQ7 > IRQ6

.5

Not used for S3F80Q5

.3 **Interrupt Subgroup B Priority Control Bit** (NOTE)

0	IRQ3 > IRQ4
1	IRQ4 > IRQ3

.2 **Interrupt Group B Priority Control Bit** (NOTE)

0	IRQ2 > (IRQ3, IRQ4)
1	(IRQ3, IRQ4) > IRQ2

.0 **Interrupt Group A Priority Control Bit**

0	IRQ0 > IRQ1
1	IRQ1 > IRQ0

NOTE: The S3F80Q5 interrupt structure uses seven levels: IRQ0-IRQ7 (IRQ5 is reserved for S3F80Q5).

4.2.15 IRQ: Interrupt Request Register (DCH, Set1, Bank0)

Bit Identifier	.7	.6	.5	.4	.3	.2	.1	.0
Reset Value	0	0	0	0	0	0	0	0
Read/Write	R	R	R	R	R	R	R	R
Addressing Mode	Register addressing mode only							

.7 **Level 7 (IRQ7) Request Pending Bit; External Interrupts P0.7-P0.4**

0	Not pending
1	Pending

.6 **Level 6 (IRQ6) Request Pending Bit; External Interrupts P0.3-P0.0**

0	Not pending
1	Pending

.5

Not used for S3F80Q5

.4 **Level 4 (IRQ4) Request Pending Bit; External Interrupts P2.0**

0	Not pending
1	Pending

.3 **Level 3 (IRQ3) Request Pending Bit; Timer 2 Match/Capture or Overflow**

0	Not pending
1	Pending

.2 **Level 2 (IRQ2) Request Pending Bit; Counter A Interrupt**

0	Not pending
1	Pending

.1 **Level 1 (IRQ1) Request Pending Bit; Timer 1 Match/Capture or Overflow**

0	Not pending
1	Pending

.0 **Level 0 (IRQ0) Request Pending Bit; Timer 0 Match/Capture or Overflow**

0	Not pending
1	Pending

4.2.16 LVDCON: LVD Control Register (E0H, Set1, Bank1)

Bit Identifier	.7	.6	.5	.4	.3	.2	.1	.0
Reset Value	–	–	–	–	–	–	–	0
Read/Write	–	–	–	–	–	–	–	R/W
Addressing Mode	Register addressing mode only							

.7–.1

Not used for S3F80Q5

.0 **LVD Flag Indicator Bit**

0	$V_{DD} \geq$ LVD_FLAG Level
1	$V_{DD} <$ LVD_FLAG Level

NOTE: When LVD detects LVD_FLAG level, LVDCON.0 flag bit is set automatically. When VDD is upper LVD_FLAG level, LVDCON.0 flag bit is cleared automatically.

4.2.17 LVDSEL: LVD Flag Level Selection Register (F1H, Set1, Bank1

Bit Identifier	.7	.6	.5	.4	.3	.2	.1	.0
Reset Value	0	0	–	–	–	–	–	–
Read/Write	R/W	R/W	–	–	–	–	–	–
Addressing Mode	Register addressing mode only							

.7 and .6 **LVD Flag Level Selection Bits**

0	0	LVD_FLAG Level = 1.90 V
0	1	LVD_FLAG Level = 2.00 V
1	0	LVD_FLAG Level = 2.10 V
1	1	LVD_FLAG Level = 2.20 V

.5–.0

Not used for S3F80Q5

4.2.18 P0CONH: Port 0 Control Register (High Byte) (E8H, Set1, Bank0)

Bit Identifier	.7	.6	.5	.4	.3	.2	.1	.0
Reset Value	0	0	0	0	0	0	0	0
Read/Write	R/W	R/W	R/W	R/W	R/W	R/W	R/W	R/W
Addressing Mode	Register addressing mode only							

.7 and .6 **P0.7/INT4 Mode Selection Bits**

0	0	C-MOS input mode; interrupt on falling edges
0	1	C-MOS input mode; interrupt on rising and falling edges
1	0	Push-pull output mode
1	1	C-MOS input mode; interrupt on rising edges

.5 and .4 **P0.6/INT4 Mode Selection Bits**

0	0	C-MOS input mode; interrupt on falling edges
0	1	C-MOS input mode; interrupt on rising and falling edges
1	0	Push-pull output mode
1	1	C-MOS input mode; interrupt on rising edges

.3 and .2 **P0.5/INT4 Mode Selection Bits**

0	0	C-MOS input mode; interrupt on falling edges
0	1	C-MOS input mode; interrupt on rising and falling edges
1	0	Push-pull output mode
1	1	C-MOS input mode; interrupt on rising edges

.1 and .0 **P0.4/INT4 Mode Selection Bits**

0	0	C-MOS input mode; interrupt on falling edges
0	1	C-MOS input mode; interrupt on rising and falling edges
1	0	Push-pull output mode
1	1	C-MOS input mode; interrupt on rising edges

NOTE:

1. The INT4 external interrupts at the P0.7-P0.4 pins share the same interrupt level (IRQ7) and interrupt vector address (E8H).
2. You can assign pull-up resistors to individual port 0 pins by making the appropriate settings to the P0PUR register. (P0PUR.7-P0PUR.4)

4.2.19 P0CONL: Port 0 Control Register (Low Byte) (E9H, Set1, Bank0)

Bit Identifier	.7	.6	.5	.4	.3	.2	.1	.0
Reset Value	0	0	0	0	0	0	0	0
Read/Write	R/W	R/W	R/W	R/W	R/W	R/W	R/W	R/W
Addressing Mode	Register addressing mode only							

.7 and .6 **P0.3/INT3 Mode Selection Bits**

0	0	C-MOS input mode; interrupt on falling edges
0	1	C-MOS input mode; interrupt on rising and falling edges
1	0	Push-pull output mode
1	1	C-MOS input mode; interrupt on rising edges

.5 and .4 **P0.2/INT2 Mode Selection Bits**

0	0	C-MOS input mode; interrupt on falling edges
0	1	C-MOS input mode; interrupt on rising and falling edges
1	0	Push-pull output mode
1	1	C-MOS input mode; interrupt on rising edges

.3 and .2 **P0.1/INT1 Mode Selection Bits**

0	0	C-MOS input mode; interrupt on falling edges
0	1	C-MOS input mode; interrupt on rising and falling edges
1	0	Push-pull output mode
1	1	C-MOS input mode; interrupt on rising edges

.1 and .0 **P0.0/INT0 Mode Selection Bits**

0	0	C-MOS input mode; interrupt on falling edges
0	1	C-MOS input mode; interrupt on rising and falling edges
1	0	Push-pull output mode
1	1	C-MOS input mode; interrupt on rising edges

NOTE:

1. The INT3-INT0 external interrupts at P0.3-P0.0 are interrupt level IRQ6. Each interrupt has a separate vector address.
2. You can assign pull-up resistors to individual port 0 pins by making the appropriate settings to the P0PUR register. (P0PUR.3-P0PUR.0)

4.2.20 P0INT: Port 0 External Interrupt Enable Register (F1H, Set1, Bank0)

Bit Identifier	.7	.6	.5	.4	.3	.2	.1	.0
Reset Value	0	0	0	0	0	0	0	0
Read/Write	R/W	R/W	R/W	R/W	R/W	R/W	R/W	R/W
Addressing Mode	Register addressing mode only							

.7 **P0.7 External Interrupt (INT4) Enable Bit**

0	Disable interrupt
1	Enable interrupt

.6 **P0.6 External Interrupt (INT4) Enable Bit**

0	Disable interrupt
1	Enable interrupt

.5 **P0.5 External Interrupt (INT4) Enable Bit**

0	Disable interrupt
1	Enable interrupt

.4 **P0.4 External Interrupt (INT4) Enable Bit**

0	Disable interrupt
1	Enable interrupt

.3 **P0.3 External Interrupt (INT3) Enable Bit**

0	Disable interrupt
1	Enable interrupt

.2 **P0.2 External Interrupt (INT2) Enable Bit**

0	Disable interrupt
1	Enable interrupt

.1 **P0.1 External Interrupt (INT1) Enable Bit**

0	Disable interrupt
1	Enable interrupt

.0 **P0.0 External Interrupt (INT0) Enable Bit**

0	Disable interrupt
1	Enable interrupt

4.2.21 P0PND: Port 0 External Interrupt Pending Register (F2H, Set1, Bank0)

Bit Identifier	.7	.6	.5	.4	.3	.2	.1	.0
Reset Value	0	0	0	0	0	0	0	0
Read/Write	R/W	R/W	R/W	R/W	R/W	R/W	R/W	R/W
Addressing Mode	Register addressing mode only							

.7 **P0.7 External Interrupt (INT4) Pending Flag Bit (see Note)**

0	No P0.7 external interrupt pending (when read)
1	P0.7 external interrupt is pending (when read)

.6 **P0.6 External Interrupt (INT4) Pending Flag Bit**

0	No P0.6 external interrupt pending (when read)
1	P0.6 external interrupt is pending (when read)

.5 **P0.5 External Interrupt (INT4) Pending Flag Bit**

0	No P0.5 external interrupt pending (when read)
1	P0.5 external interrupt is pending (when read)

.4 **P0.4 External Interrupt (INT4) Pending Flag Bit**

0	No P0.4 external interrupt pending (when read)
1	P0.4 external interrupt is pending (when read)

.3 **P0.3 External Interrupt (INT3) Pending Flag Bit**

0	No P0.3 external interrupt pending (when read)
1	P0.3 external interrupt is pending (when read)

.2 **P0.2 External Interrupt (INT2) Pending Flag Bit**

0	No P0.2 external interrupt pending (when read)
1	P0.2 external interrupt is pending (when read)

.1 **P0.1 External Interrupt (INT1) Pending Flag Bit**

0	No P0.1 external interrupt pending (when read)
1	P0.1 external interrupt is pending (when read)

.0 **P0.0 External Interrupt (INT0) Pending Flag Bit**

0	No P0.0 external interrupt pending (when read)
1	P0.0 external interrupt is pending (when read)

NOTE: To clear an interrupt pending condition, write a "0" to the appropriate pending flag bit. Writing a "1" to an interrupt pending flag (P0PND.7-0) has no effect.

4.2.22 P0PUR: Port 0 Pull-up Resistor Enable Register (E7H, Set1, Bank0)

Bit Identifier	.7	.6	.5	.4	.3	.2	.1	.0
Reset Value	0	0	0	0	0	0	0	0
Read/Write	R/W	R/W	R/W	R/W	R/W	R/W	R/W	R/W
Addressing Mode	Register addressing mode only							

.7 **P0.7 Pull-up Resistor Enable Bit**

0	Disable pull-up resistor
1	Enable pull-up resistor

.6 **P0.6 Pull-up Resistor Enable Bit**

0	Disable pull-up resistor
1	Enable pull-up resistor

.5 **P0.5 Pull-up Resistor Enable Bit**

0	Disable pull-up resistor
1	Enable pull-up resistor

.4 **P0.4 Pull-up Resistor Enable Bit**

0	Disable pull-up resistor
1	Enable pull-up resistor

.3 **P0.3 Pull-up Resistor Enable Bit**

0	Disable pull-up resistor
1	Enable pull-up resistor

.2 **P0.2 Pull-up Resistor Enable Bit**

0	Disable pull-up resistor
1	Enable pull-up resistor

.1 **P0.1 Pull-up Resistor Enable Bit**

0	Disable pull-up resistor
1	Enable pull-up resistor

.0 **P0.0 Pull-up Resistor Enable Bit**

0	Disable pull-up resistor
1	Enable pull-up resistor

4.2.23 P1CONH: Port 1 Control Register (High Byte) (EAH, Set1, Bank0)

Bit Identifier	.7	.6	.5	.4	.3	.2	.1	.0
Reset Value	1	1	1	1	1	1	1	1
Read/Write	R/W	R/W	R/W	R/W	R/W	R/W	R/W	R/W
Addressing Mode	Register addressing mode only							

.7 and .6 **P1.7 Mode Selection Bits**

0	0	C-MOS input mode
0	1	Open-drain output mode
1	0	Push-pull output mode
1	1	C-MOS input with pull up mode

.5 and .4 **P1.6 Mode Selection Bits**

0	0	C-MOS input mode
0	1	Open-drain output mode
1	0	Push-pull output mode
1	1	C-MOS input with pull up mode

.3 and .2 **P1.5 Mode Selection Bits**

0	0	C-MOS input mode
0	1	Open-drain output mode
1	0	Push-pull output mode
1	1	C-MOS input with pull up mode

.1 and .0 **P1.4 Mode Selection Bits**

0	0	C-MOS input mode
0	1	Open-drain output mode
1	0	Push-pull output mode
1	1	C-MOS input with pull up mode

NOTE: P1CONH's reset value is 0FFH. After reset, initial values of port1.4-.7 become CMOS input with pull-up mode.

4.2.24 P1CONL: Port 1 Control Register (Low Byte) (EBH, Set1, Bank0)

Bit Identifier	.7	.6	.5	.4	.3	.2	.1	.0
Reset Value	0	0	0	0	0	0	0	0
Read/Write	R/W	R/W	R/W	R/W	R/W	R/W	R/W	R/W
Addressing Mode	Register addressing mode only							

.7 and .6 **P1.3/NSS Mode Selection Bits**

0	0	C-MOS input mode
0	1	Alternative function (NSS)
1	0	Push-pull output mode
1	1	C-MOS input with pull up mode

.5 and .4 **P1.2/SCK Mode Selection Bits**

0	0	C-MOS input mode
0	1	Alternative function (SCK)
1	0	Push-pull output mode
1	1	C-MOS input with pull up mode

.3 and .2 **P1.1/MOSI Mode Selection Bits**

0	0	C-MOS input mode
0	1	Alternative function (MOSI)
1	0	Push-pull output mode
1	1	C-MOS input with pull up mode

.1 and .0 **P1.0/MISO Mode Selection Bits**

0	0	C-MOS input mode
0	1	Alternative function (MISO)
1	0	Push-pull output mode
1	1	C-MOS input with pull up mode

4.2.25 P1OUTPU: Port 1 Output Pull-Up Resistor Enable Register (F2H, Set1, Bank1)

Bit Identifier	.7	.6	.5	.4	.3	.2	.1	.0
Reset Value	0	0	0	0	0	0	0	0
Read/Write	R/W	R/W	R/W	R/W	R/W	R/W	R/W	R/W
Addressing Mode	Register addressing mode only							

.7 **P1.7 Output Mode Pull-up Resistor Enable Bit**

0	Disable pull-up resistor
1	Enable pull-up resistor

.6 **P1.6 Output Mode Pull-up Resistor Enable Bit**

0	Disable pull-up resistor
1	Enable pull-up resistor

.5 **P1.5 Output Mode Pull-up Resistor Enable Bit**

0	Disable pull-up resistor
1	Enable pull-up resistor

.4 **P1.4 Output Mode Pull-up Resistor Enable Bit**

0	Disable pull-up resistor
1	Enable pull-up resistor

.3 **P1.3 Output Mode Pull-up Resistor Enable Bit**

0	Disable pull-up resistor
1	Enable pull-up resistor

.2 **P1.2 Output Mode Pull-up Resistor Enable Bit**

0	Disable pull-up resistor
1	Enable pull-up resistor

.1 **P1.1 Output Mode Pull-up Resistor Enable Bit**

0	Disable pull-up resistor
1	Enable pull-up resistor

.0 **P1.0 Output Mode Pull-up Resistor Enable Bit**

0	Disable pull-up resistor
1	Enable pull-up resistor

4.2.26 P2CONL: Port 2 Control Register (Low Byte) (EDH, Set1, Bank0)

Bit Identifier	.7	.6	.5	.4	.3	.2	.1	.0
Reset Value	0	0	0	0	0	0	0	0
Read/Write	R/W	R/W	R/W	R/W	R/W	R/W	R/W	R/W
Addressing Mode	Register addressing mode only							

.1 and .0 **P2.0/INT5 Mode Selection Bits**

0	0	C-MOS input mode; interrupt on falling edges
0	1	C-MOS input mode; interrupt on rising edges and falling edges
1	0	Output mode; push-pull or open-drain output (refer to P2OUTMD)
1	1	C-MOS input mode; interrupt on rising edges

NOTE: Pull-up resistors can be assigned to individual port 2 pins by making the appropriate settings to the P2PUR control register, location EEH, set 1, bank 0.

4.2.27 P2INT: Port 2 External Interrupt Enable Register (E5H, Set1, Bank0)

Bit Identifier	.7	.6	.5	.4	.3	.2	.1	.0
Reset Value	0	0	0	0	0	0	0	0
Read/Write	R/W	R/W	R/W	R/W	R/W	R/W	R/W	R/W
Addressing Mode	Register addressing mode only							

.0 **P2.0 External Interrupt (INT4) Enable Bit**

0	Disable interrupt
1	Enable interrupt

4.2.28 P2OUTMD: Port 2 Output Mode Selection Register (F3H, Set1, Bank1)

Bit Identifier	.7	.6	.5	.4	.3	.2	.1	.0
Reset Value	0	0	0	0	0	0	0	0
Read/Write	R/W	R/W	R/W	R/W	R/W	R/W	R/W	R/W
Addressing Mode	Register addressing mode only							

.0 **P2.0 Output Mode Selection Bit**

0	Push-pull output mode
1	Open-drain output mode

4.2.29 P2PND: Port 2 External Interrupt Pending Register (E6H, Set1, Bank0)

Bit Identifier	.7	.6	.5	.4	.3	.2	.1	.0
Reset Value	0	0	0	0	0	0	0	0
Read/Write	R/W	R/W	R/W	R/W	R/W	R/W	R/W	R/W
Addressing Mode	Register addressing mode only							

.0 **P2.0 External Interrupt (INT4) Pending Flag Bit**

0	No P2.0 external interrupt pending (when read)
1	P2.0 external interrupt is pending (when read)

NOTE: To clear an interrupt pending condition, write a "0" to the appropriate pending flag bit. Writing a "1" to an interrupt rending flag (P2PND.0-7) has no effect.

4.2.30 P2PUR: Port 2 Pull-Up Resistor Enable Register (EEH, Set1, Bank0)

Bit Identifier	.7	.6	.5	.4	.3	.2	.1	.0
Reset Value	0	0	0	0	0	0	0	0
Read/Write	R/W	R/W	R/W	R/W	R/W	R/W	R/W	R/W
Addressing Mode	Register addressing mode only							

.0 **P2.0 Pull-up Resistor Enable Bit**

0	Disable pull-up resistor
1	Enable pull-up resistor

4.2.31 P3CON: Port 3 Control Register (EFH, Set1, Bank0)

Bit Identifier	.7	.6	.5	.4	.3	.2	.1	.0
Reset Value	0	0	0	0	0	0	0	0
Read/Write	R/W	R/W	R/W	R/W	R/W	R/W	R/W	R/W
Addressing Mode	Register addressing mode only							

.7 and .6 **Package selection and Alternative function select Bits**

0	0	24 pin package P3.0: T0PWM/T0CAP/T1CAP, P3.1: REM/T0CK
Others		Not used for S3F80Q5

.5 **P3.1 Function Selection Bit**

0	Normal I/O selection
1	Alternative function enable (REM/T0CK)

.4 and .3 **P3.1 Mode Selection Bits**

0	0	Schmitt trigger input mode
0	1	Open-drain output mode
1	0	Push pull output mode
1	1	Schmitt trigger input with pull up resistor

.2 **Function Selection Bit for P3.0**

0	Normal I/O selection
1	Alternative function enable (P3.0: T0PWM/T0CAP/T1CAP)

.1 and .0 **P3.0 Mode Selection bits**

0	0	Schmitt trigger input mode
0	1	Open-drain output mode
1	0	Push pull output mode
1	1	Schmitt trigger input with pull up resistor

NOTE:

1. The port 3 data register, P3, at location E3H, set1, bank0, contains three bit values which correspond to the following Port 3 pin functions.
   a. Port 3, bit 7: carrier signal on ("1") or off ("0").
   b. Port 3, bit 1, 0: P3.1/REM/T0CK pin, bit 0: P3.0/T0PWM/T0CAP/T1CAP pin.
2. The alternative function enable/disable are enabled in accordance with function selection bit (bit 5 and bit 2).
3. Following Table is the specific example about the alternative function and pin assignment according to the each bit control of P3CON in 24-pin package.

Table 4-3 Each Function Description and Pin Assignment of P3CON in 24-Pin Package

P3CON						Each Function Description and Assignment to P3.0-P3.3	
B5	B4	B3	B2	B1	B0	P3.0	P3.1
0	x	x	0	x	x	Normal I/O	Normal I/O
0	x	x	1	0	0	T0_CAP/T1_CAP	Normal I/O
0	x	x	1	1	1	T0_CAP/T1_CAP	Normal I/O
0	x	x	1	0	1	T0PWM	Normal I/O
0	x	x	1	1	0	T0PWM	Normal I/O
1	0	0	0	x	x	Normal I/O	T0CK
1	1	1	0	x	x	Normal I/O	T0CK
1	0	1	0	x	x	Normal I/O	REM
1	1	0	0	x	x	Normal I/O	REM
1	0	0	1	0	0	T0_CAP/T1_CAP	T0CK
1	1	1	1	1	1	T0_CAP/T1_CAP	T0CK
1	0	1	1	0	1	T0PWM	REM
1	1	0	1	1	0	T0PWM	REM
1	0	0	1	0	1	T0PWM	Normal Input
1	1	1	1	1	0	T0PWM	Normal Input
1	0	1	1	0	0	T0_CAP/T1_CAP	REM
1	1	0	1	1	1	T0_CAP/T1_CAP	REM

4.2.32 P3OUTPU: Port 3 Output Pull-Up Resistor Enable Register (F4H, Set1, Bank1)

Bit Identifier	.7	.6	.5	.4	.3	.2	.1	.0
Reset Value	–	–	–	–	–	–	0	0
Read/Write	–	–	–	–	–	–	R/W	R/W
Addressing Mode	Register addressing mode only							

.7–.2

Not used for S3F80Q5

.1 **P3.1 Output Mode Pull-up Resistor Enable Bit**

0	Disable pull-up resistor
1	Enable pull-up resistor

.0 **P3.0 Output Mode Pull-up Resistor Enable Bit**

0	Disable pull-up resistor
1	Enable pull-up resistor

4.2.33 PP: Register Page Pointer (DFH, Set1, Bank0)

Bit Identifier	.7	.6	.5	.4	.3	.2	.1	.0
Reset Value	0	0	0	0	0	0	0	0
Read/Write	R/W	R/W	R/W	R/W	R/W	R/W	R/W	R/W
Addressing Mode	Register addressing mode only							

.7–.4 **Destination Register Page Selection Bits**

0	0	0	0	Destination: page 0 (NOTE)

.3–.0 **Source Register Page Selection Bits**

0	0	0	0	Source: page 0 (NOTE)

NOTE: In the S3F80Q5 microcontroller, a paged expansion of the internal register file is not implemented. For this reason, only page 0 settings are valid. Register page pointer values for the source and destination register page are automatically set to "0000B" following a hardware reset. These values should not be changed curing normal operation.

4.2.34 RESETID: Reset Source Indicating Register (F0H, Set1, Bank1)

Bit Identifier	.7	.6	.5	.4	.3	.2	.1	.0
Read/Write	–	–	–	R/W	R/W	R/W	R/W	R/W
Addressing Mode	Register addressing mode only							

.7–.4	Not used for S3F80Q5

.3 **Key-in Reset Indicating Bit**

0	Reset is not generated by P0 external INT
1	Reset is generated by P0 external INT

.2 **WDT Reset Indicating Bit**

0	Reset is not generated by WDT (when read)
1	Reset is generated by WDT (when read)

.1 **LVD Reset Indicating Bit**

0	Reset is not generated by LVD (when read)
1	Reset is generated by LVD (when read)

.0 **POR Reset Indicating Bit**

0	Reset is not generated by POR (when read)
1	Reset is generated by POR (when read)

State of RESETID Depends on Reset Source

	.7	.6	.5	.4	.3	.2	.1	.0
POR	–	–	–	0	0	0	1	1
LVD	–	–	–	0	0	0	1	(2)
WDT, Key-in	–	–	–	–	(3)		(2)	

NOTE:

1. To clear an indicating register, write a "0" to indicating flag bit. Writing a "1" to a reset indicating flag (RESETID.0–.3) has no effect.
2. Not affected by any other reset.
3. Bits corresponding to sources that are active at the time of reset will be set.

4.2.35 RP0: Register Pointer 0 (D6H, Set1, Bank0)

Bit Identifier	.7	.6	.5	.4	.3	.2	.1	.0
Reset Value	1	1	0	0	0	–	–	–
Read/Write	R/W	R/W	R/W	R/W	R/W	–	–	–
Addressing Mode	Register addressing mode only							

.7–.3 **Register Pointer 0 Address Value**

Register pointer 0 can independently point to one of the 248-byte working register areas in the register file. Using the register pointers RP0 and RP1, you can select two 8-byte register slices at one time as active working register space. After a reset, RP0 points to address C0H in register set 1, bank0, selecting the 8-byte working register slice C0H-C7H.

.2–.0 Not used for S3F80Q5

4.2.36 RP1: Register Pointer 1 (D7H, Set1, Bank0)

Bit Identifier	.7	.6	.5	.4	.3	.2	.1	.0
Reset Value	1	1	0	0	1	–	–	–
Read/Write	R/W	R/W	R/W	R/W	R/W	–	–	–
Addressing Mode	Register addressing mode only							

.7–.3 **Register Pointer 1 Address Value**

Register pointer 1 can independently point to one of the 248-byte working register areas in the register file. Using the register pointers RP0 and RP1, you can select two 8-byte register slices at one time as active working register space. After a reset, RP1 points to address C8H in register set 1, bank0, selecting the 8-byte working register slice C8H-CFH.

.2–.0 Not used for S3F80Q5

4.2.37 SPL: Stack Pointer (Low Byte) (D9H, Set1, Bank0)

Bit Identifier	.7	.6	.5	.4	.3	.2	.1	.0
Reset Value	x	x	x	x	x	x	x	x
Read/Write	R/W	R/W	R/W	R/W	R/W	R/W	R/W	R/W
Addressing Mode	Register addressing mode only							

.7–.0 **Stack Pointer Address (Low Byte)**

The SP value is undefined following a reset

4.2.38 SPICON: SPI Control Register (E9H, Set1, Bank1)

Bit Identifier	.7	.6	.5	.4	.3	.2	.1	.0
Reset Value	0	0	0	0	0	0	0	0
Read/Write	RW	RW	RW	RW	RW	RW	RW	RW
Addressing Mode	Register addressing mode only							

.7 **SPI Interrupt Enable/Disable Bit**

0	SPI Interrupt Disable
1	SPI Interrupt Enable

.6 **SPI Enable Bit**

0	SPI Disable
1	SPI Enable

.5 **Data Order Selection Bit**

0	LSB First
1	MSB First

.4 **Master/Slave Mode Selection Bit**

0	Slave Mode
1	Master Mode

.3 **Clock Polarity Bit**

0	Clock Low when Idle
1	Clock High when Idle

.2 **Clock Phase Bit**

0	Sample on the leading edge of SPCK
1	Sample on the trailing edge of SPCK

.1–.0 **SPCK Rate Selection Bit**

0	0	fosc/4
0	1	fosc/16
1	0	fosc/64
1	1	fosc/256

4.2.39 SPISTAT: SPI Status Register (EAH, Set1, Bank1)

Bit Identifier	.7	.6	.5	.4	.3	.2	.1	.0
Reset Value	0	0	0	–	–	–	–	0
Read/Write	R	R	R	–	–	–	–	RW
Addressing Mode	Register addressing mode only							

.7 **SPI Interrupt Pending Bit**

0	No pending
1	Interrupt pending

.6 **SPI Enable Bit**

0	No write collision
1	Write collision

.5 **Mode Fault Bit**

0	No Mode fault
1	Mode fault

4 and .1

Not used for S3F80Q5.

.0 **Double SPI Speed Bit**

0	Single
1	Double when in Master Mode

4.2.40 STOPCON: Stop Control Register (FBH, Set1, Bank0)

Bit Identifier	.7	.6	.5	.4	.3	.2	.1	.0
Reset Value	0	0	0	0	0	0	0	0
Read/Write	W	W	W	W	W	W	W	W
Addressing Mode	Register addressing mode only							

.7–.0 **Stop Control Register enable bits**

1	0	1	0	0	1	0	1	Enable Stop Mode
Other value								Disable Stop Mode

NOTE:

1. To get into Stop Mode, stop control register must be enabled just before STOP instruction.
2. When Stop Mode is released, stop control register (STOPCON) value is cleared automatically.
3. It is prohibited to write another value into STOPCON.

4.2.41 SYM: System Mode Register (DEH, Set1, Bank0)

Bit Identifier	.7	.6	.5	.4	.3	.2	.1	.0
Reset Value	0	–	–	x	x	x	0	0
Read/Write	R/W	–	–	R/W	R/W	R/W	R/W	R/W
Addressing Mode	Register addressing mode only							

.7 **Tri-State External Interface Control Bit** (1)

0	Normal operation (disable tri-state operation)
1	Set external interface lines to high impedance (enable tri-state operation)

.6 and .5

Not used for S3F80Q5 (2)

.4– .2 **Fast Interrupt Level Selection Bits** (3)

0	0	0	IRQ0
0	0	1	IRQ1
0	1	0	IRQ2
0	1	1	IRQ3
1	0	0	IRQ4
1	0	1	Not used for S3F80Q5
1	1	0	IRQ6
1	1	1	IRQ7

.1 **Fast Interrupt Enable Bit** (4)

0	Disable fast interrupt processing
1	Enable fast interrupt processing

.0 **Global Interrupt Enable Bit** (5)

0	Disable global interrupt processing
1	Enable global interrupt processing

NOTE:

1. Because an external interface is not implemented for the S3F80Q5, SYM.7 must always be "0".
2. Although the SYM register is not used, SYM.5 should always be "0". If you accidentally write a "1" to this bit during normal operation, a system malfunction may occur.
3. You can select only one interrupt level at a time for fast interrupt processing.
4. Setting SYM.1 to "1" enables fast interrupt processing for the interrupt level currently selected by SYM.2–SYM.4.
5. Following a reset, you must enable global interrupt processing by executing an EI instruction (not by writing a "1" to SYM.0)

4.2.42 T0CON: Timer 0 Control Register (D2H, Set 1, Bank0)

Bit Identifier	.7	.6	.5	.4	.3	.2	.1	.0
Reset Value	0	0	0	0	0	0	0	0
Read/Write	R/W	R/W	R/W	R/W	R/W	R/W	R/W	R/W
Addressing Mode	Register addressing mode only							

.7 and .6 **Timer 0 Input Clock Selection Bits**

0	0	$f_{OSC}/4096$
0	1	$f_{OSC}/256$
1	0	$f_{OSC}/8$
1	1	External clock input (at the T0CK pin, P3.1)

.5 and .4 **Timer 0 Operating Mode Selection Bits**

0	0	Interval timer mode (counter cleared by match signal)
0	1	Capture mode (rising edges, counter running, OVF interrupt can occur)
1	0	Capture mode (falling edges, counter running, OVF interrupt can occur)
1	1	PWM mode (Match and OVF interrupt can occur)

.3 **Timer 0 Counter Clear Bit**

0	No effect (when write)
1	Clear T0 counter, T0CNT (when write)

.2 **Timer 0 Overflow Interrupt Enable Bit** (NOTE)

0	Disable T0 overflow interrupt
1	Enable T0 overflow interrupt

.1 **Timer 0 Match/Capture Interrupt Enable Bit**

0	Disable T0 match/capture interrupt
1	Enable T0 match/capture interrupt

.0 **Timer 0 Match/Capture Interrupt Pending Flag Bit**

0	No T0 match/capture interrupt pending (when read)
0	Clear T0 match/capture interrupt pending condition (when write)
1	T0 match/capture interrupt is pending (when read)
1	No effect (when write)

NOTE: A timer 0 overflow interrupt pending condition is automatically cleared by hardware. However, the timer 0 match/capture interrupt, IRQ0, vector FCH, must be cleared by the interrupt service routine (S/W).

4.2.43 T1CON: Timer 1 Control Register (FAH, Set1, Bank0)

Bit Identifier	.7	.6	.5	.4	.3	.2	.1	.0
Reset Value	0	0	0	0	0	0	0	0
Read/Write	R/W	R/W	R/W	R/W	R/W	R/W	R/W	R/W
Addressing Mode	Register addressing mode only							

.7 and .6 **Timer 1 Input Clock Selection Bits**

0	0	$f_{OSC}/4$
0	1	$f_{OSC}/8$
1	0	$f_{OSC}/16$
1	1	Internal clock (counter A flip-flop, T-FF)

.5 and .4 **Timer 1 Operating Mode Selection Bits**

0	0	Interval timer mode (counter cleared by match signal)
0	1	Capture mode (rising edges, counter running, OVF can occur)
1	0	Capture mode (falling edges, counter running, OVF can occur)
1	1	Capture mode (rising and falling edges, counter running, OVF can occur)

.3 **Timer 1 Counter Clear Bit**

0	No effect (when write)
1	Clear T1 counter, T1CNT (when write)

.2 **Timer 1 Overflow Interrupt Enable Bit** (NOTE)

0	Disable T1 overflow interrupt
1	Enable T1 overflow interrupt

.1 **Timer 1 Match/Capture Interrupt Enable Bit**

0	Disable T1 match/capture interrupt
1	Enable T1 match/capture interrupt

.0 **Timer 1 Match/Capture Interrupt Pending Flag Bit**

0	No T1 match/capture interrupt pending (when read)
0	Clear T1 match/capture interrupt pending condition (when write)
1	T1 match/capture interrupt is pending (when read)
1	No effect (when write)

NOTE: A timer 1 overflow interrupt pending condition is automatically cleared by hardware. However, the timer 1 match/capture interrupt, IRQ1, vector F6H, must be cleared by the interrupt service routine (S/W).

4.2.44 T2CON: Timer 2 Control Register (E8H, Set1, Bank1)

Bit Identifier	.7	.6	.5	.4	.3	.2	.1	.0
Reset Value	0	0	0	0	0	0	0	0
Read/Write	R/W	R/W	R/W	R/W	R/W	R/W	R/W	R/W
Addressing Mode	Register addressing mode only							

.7 and .6 **Timer 2 Input Clock Selection Bits**

0	0	$f_{OSC}/4$
0	1	$f_{OSC}/8$
1	0	$f_{OSC}/16$
1	1	Internal clock (counter A flip-flop, T-FF)

.5 and .4 **Timer 2 Operating Mode Selection Bits**

0	0	Interval timer mode (counter cleared by match signal)
0	1	Capture mode (rising edges, counter running, OVF can occur)
1	0	Capture mode (falling edges, counter running, OVF can occur)
1	1	Capture mode (rising and falling edges, counter running, OVF can occur)

.3 **Timer 2 Counter Clear Bit**

0	No effect (when write)
1	Clear T2 counter, T2CNT (when write)

.2 **Timer 2 Overflow Interrupt Enable Bit** (NOTE)

0	Disable T2 overflow interrupt
1	Enable T2 overflow interrupt

.1 **Timer 2 Match/Capture Interrupt Enable Bit**

0	Disable T2 match/capture interrupt
1	Enable T2 match/capture interrupt

.0 **Timer 2 Match/Capture Interrupt Pending Flag Bit**

0	No T2 match/capture interrupt pending (when read)
0	Clear T2 match/capture interrupt pending condition (when write)
1	T2 match/capture interrupt is pending (when read)
1	No effect (when write)

NOTE: A timer 2 overflow interrupt pending condition is automatically cleared by hardware. However, the timer 2 match/capture interrupt, IRQ3, vector F2H, must be cleared by the interrupt service routine (S/W).

5 Interrupt Structure

5.1 Overview

The S3C8/S3F8-series interrupt structure has three basic components: levels, vectors, and sources. The SAM8RC CPU recognizes up to eight interrupt levels and supports up to 128 interrupt vectors. When a specific interrupt level has more than one vector address, the vector priorities are established in hardware. A vector address can be assigned to one or more sources.

5.1.1 Levels

Interrupt levels are the main unit for interrupt priority assignment and recognition. All peripherals and I/O blocks can issue interrupt requests. In other words, peripheral and I/O operations are interrupt-driven. There are seven possible interrupt levels: IRQ0-IRQ7 (IRQ5 is reserved for S3F80Q5), also called level 0-level 7 (level 5 is reserved for S3F80Q5). Each interrupt level directly corresponds to an interrupt request number (IRQn). The total number of interrupt levels used in the interrupt structure varies from device to device. The S3F80Q5 interrupt structure recognizes seven interrupt levels.

The interrupt level numbers 0 through 7 (5 is reserved for S3F80Q5) do not necessarily indicate the relative priority of the levels. They are simply identifiers for the interrupt levels that are recognized by the CPU. The relative priority of different interrupt levels is determined by settings in the interrupt priority register, IPR. Interrupt group and subgroup logic controlled by IPR register settings lets you define more complex priority relationships between different levels.

5.1.2 Vectors

Each interrupt level can have one or more interrupt vectors, or it may have no vector address assigned at all. The maximum number of vectors that can be supported for a given level is 128. (The actual number of vectors used for S3C8/S3F8-series devices is always much smaller.) If an interrupt level has more than one vector address, the vector priorities are set in hardware. The S3F80Q5 uses sixteen (24-ELP) vectors. One vector addresses are shared by four (24-ELP) interrupt sources.

5.1.3 Sources

A source is any peripheral that generates an interrupt. A source can be an external pin or a counter overflow, for example. Each vector can have several interrupt sources. In the S3F80Q5 interrupt structure, there are 19 (24-ELP) possible interrupt sources.

When a service routine starts, the respective pending bit is either cleared automatically by hardware or is must be cleared "manually" by program software. The characteristics of the source's pending mechanism determine which method is used to clear its respective pending bit.

5.1.4 Interrupt Types

The three components of the S3C8/S3F8-series interrupt structure described above-levels, vectors, and sources-are combined to determine the interrupt structure of an individual device and to make full use of its available interrupt logic. There are three possible combinations of interrupt structure components, called interrupt types 1, 2, and 3.

The types differ in the number of vectors and interrupt sources assigned to each level; (see *Figure 5-1*):

- Type 1: One level (IRQn) + one vector (V_1) + one source (S_1)
- Type 2: One level (IRQn) + one vector (V_1) + multiple sources (S_1 – S_n)
- Type 3: One level (IRQn) + multiple vectors (V_1 – V_n) + multiple sources (S_1 – S_n, S_{n+1} – S_{n+m})

In the S3F80Q5 microcontroller, all three interrupt types are implemented.

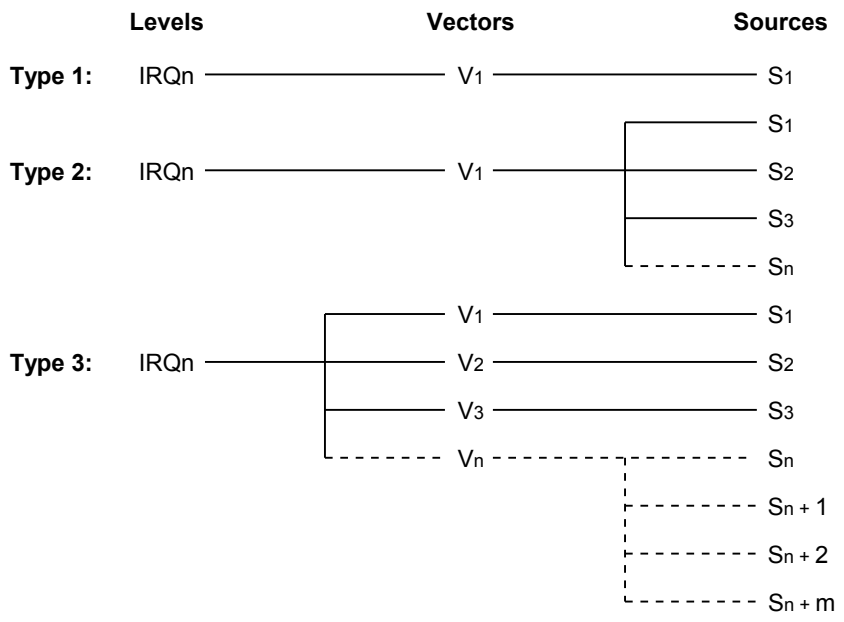

NOTE: The number of S_n and V_n value is expandable.

Figure 5-1 S3C8/S3F8-Series Interrupt Types

The S3F80Q5 microcontroller supports ninteen (24-ELP) interrupt sources. Fifteen (24-ELP) of the interrupt sources have a corresponding interrupt vector address; the remaining four(24-ELP) interrupt sources share by one vector address. Seven interrupt levels are recognized by the CPU in this device-specific interrupt structure, as shown in *Figure 5-2*.

When multiple interrupt levels are active, the interrupt priority register (IPR) determines the order in which contending interrupts are to be serviced. If multiple interrupts occur within the same interrupt level, the interrupt with the lowest vector address is usually processed first (The relative priorities of multiple interrupts within a single level are fixed in hardware).

When the CPU grants an interrupt request, interrupt processing starts: All other interrupts are disabled and the program counter value and status flags are pushed to stack. The starting address of the service routine is fetched from the appropriate vector address (plus the next 8-bit value to concatenate the full 16-bit address) and the service routine is executed.

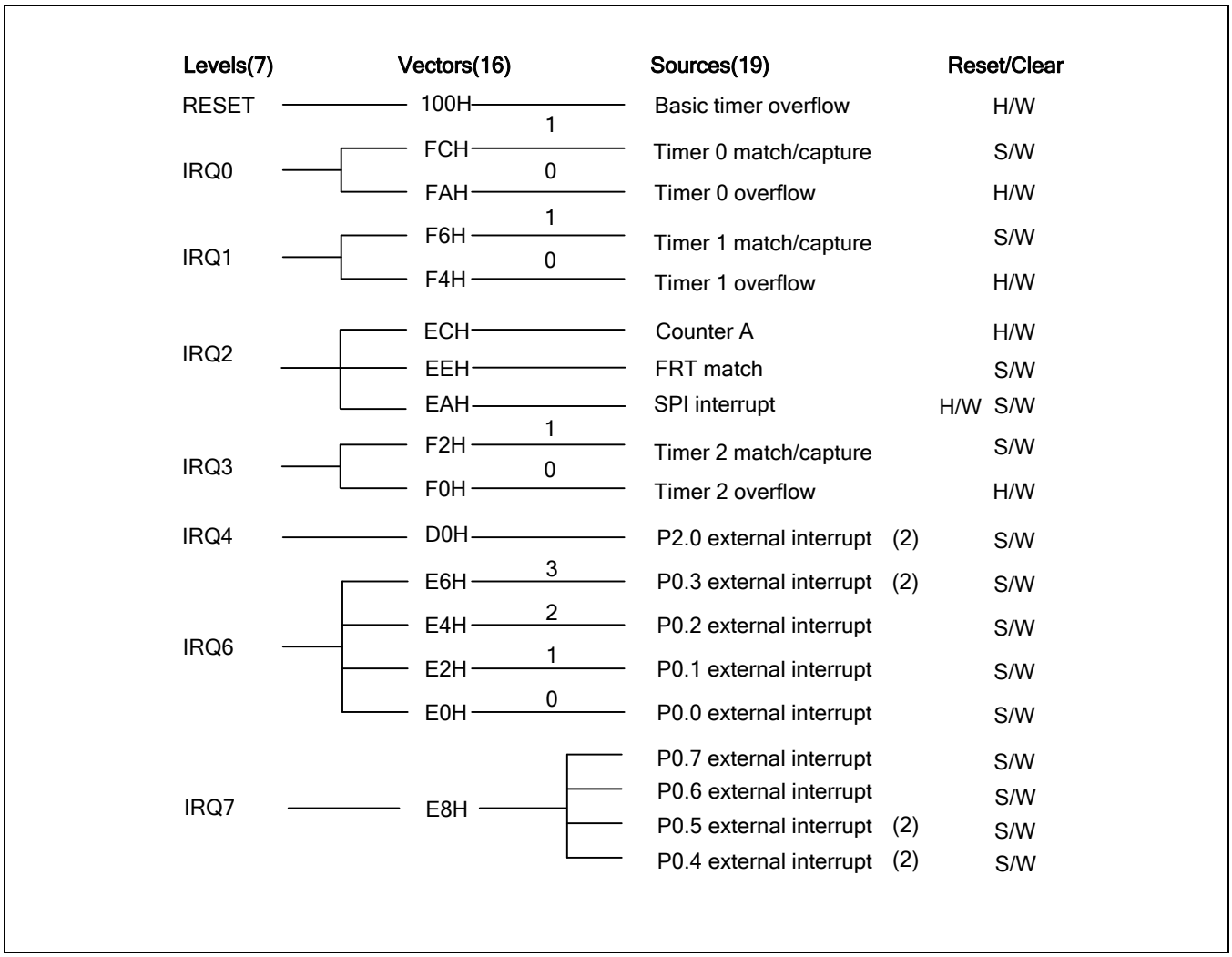

Figure 5-2 S3F80Q5 Interrupt Structure

NOTE:

1. Reset interrupt vector address (Basic timer overflow) can be varied by Smart Option.
2. 24-ELP package only.

5.1.5 Interrupt Vector Addresses

All interrupt vector addresses for the S3F80Q5 interrupt structure are stored in the vector address area of the internal program memory ROM, 00H–FFH; (see *Figure 5-3*).

You can allocate unused locations in the vector address area as normal program memory. If you do so, please be careful not to overwrite any of the stored vector addresses; (see *Table 5-1* lists all vector addresses).

The program reset address in the ROM is 0100H. Reset address can be changed by Smart Option (Refer to Figure 14-2 or Figure 2-2).

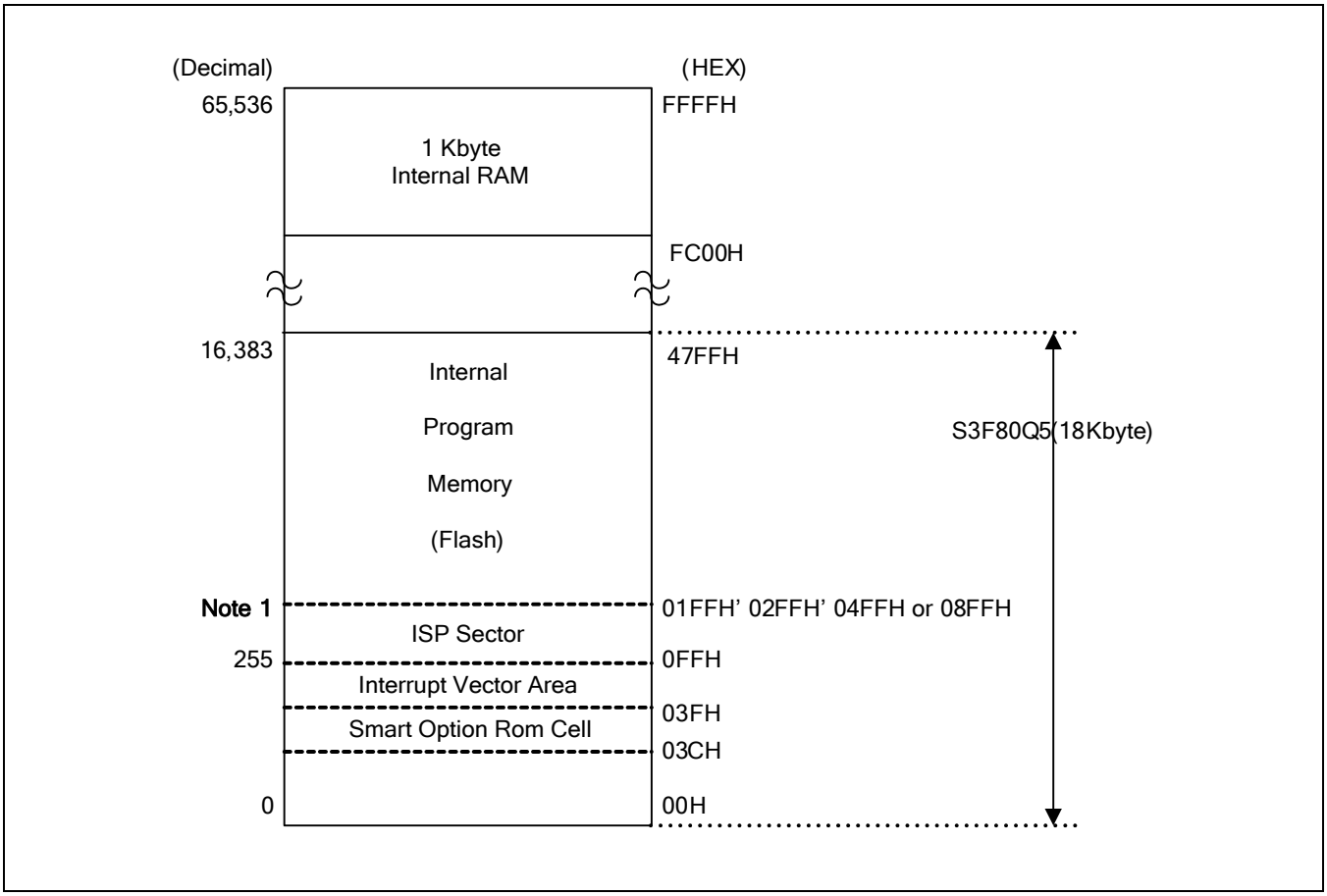

Figure 5-3 ROM Vector Address Area

NOTE: The size of ISP™ sector can be varied by Smart Option (Refer to Figure 2-2 and Figure 14-2). According to the Smart Option setting related to the ISP, ISP reset vector address can be changed one of addresses to be selected (200H, 300H, 500H, or 900H).

Table 5-1 S3F80Q5 Interrupt Vectors

Vector Address		Interrupt Source	Request		Reset/Clear	
Decimal Value	Hex Value		Interrupt Level	Priority in Level	H/W	S/W
256	100H	Basic timer overflow/POR	RESET	–	√	–
252	FCH	Timer 0 match/capture	IRQ0	1	–	√
250	FAH	Timer 0 overflow	–	0	√	–
246	F6H	Timer 1 match/capture	IRQ1	1	–	√
244	F4H	Timer 1 overflow	–	0	√	–
236	ECH	Counter A	IRQ2	2	√	–
238	EEH	FRT match		1	√	–
234	EAH	SPI interrupt		0	√	√
242	F2H	Timer 2 match/capture	IRQ3	1	–	√
240	F0H	Timer 2 overflow	–	0	√	–
232	E8H	P0.7 external interrupt	IRQ7	–	–	√
232	E8H	P0.6 external interrupt	–	–	–	√
232	E8H	P0.5 external interrupt	–	–	–	√
232	E8H	P0.4 external interrupt	–	–	–	√
230	E6H	P0.3 external interrupt	IRQ6	3	–	√
228	E4H	P0.2 external interrupt	–	2	–	√
226	E2H	P0.1 external interrupt	–	1	–	√
224	E0H	P0.0 external interrupt	–	0	–	√
208	D0H	P2.0 external interrupt	IRQ4	–	–	√

NOTE:

1. Interrupt priorities are identified in inverse order: "0" is highest priority, "1" is the next highest, and so on.
2. If two or more interrupts within the same level content, the interrupt with the lowest vector address usually has priority over one with a higher vector address. The priorities within a given level are fixed in hardware.
3. Reset (Basic timer overflow or POR) interrupt vector address can be changed by Smart Option (Refer to Figure 2-2).
4. P0.3-P0.5, P2.0 external interrupt is for 24-ELP package only.

5.1.6 Enable/Disable Interrupt Instructions (EI, DI)

Executing the Enable Interrupts (EI) instruction globally enables the interrupt structure. All interrupts are then serviced as they occur, and according to the established priorities.

NOTE: The system initialization routine that is executed following a reset must always contain an EI instruction to globally enable the interrupt structure.

During normal operation, you can execute the DI (Disable Interrupt) instruction at any time to globally disable interrupt processing. The EI and DI instructions change the value of bit 0 in the SYM register. Although you can manipulate SYM.0 directly to enable or disable interrupts, we recommend that you use the EI and DI instructions instead.

5.1.6.1 System-Level Interrupt Control Registers

In addition to the control registers for specific interrupt sources, four system-level registers control interrupt processing:

- The interrupt mask register, IMR, enables (un-masks) or disables (masks) interrupt levels.
- The interrupt priority register, IPR, controls the relative priorities of interrupt levels.
- The interrupt request register, IRQ, contains interrupt pending flags for each interrupt level (as opposed to each interrupt source).
- The system mode register, SYM, enables or disables global interrupt processing (SYM settings also enable fast interrupts and control the activity of external interface, if implemented).

Table 5-2 Interrupt Control Register Overview

Control Register	ID	R/W	Function Description
Interrupt Mask Register	IMR	R/W	Bit settings in the IMR register enable or disable interrupt processing for each of the seven interrupt levels: IRQ0–IRQ7 (IRQ5 is reserved for S3F80Q5).
Interrupt Priority Register	IPR	R/W	Controls the relative processing priorities of the interrupt levels. The seven levels of the S3F80Q5 are organized into three groups: A, B, and C. Group A is IRQ0 and IRQ1, group B is IRQ2, IRQ3 and IRQ4, and group C is IRQ6, IRQ7.
Interrupt Request Register	IRQ	R	This register contains a request pending bit for each interrupt level.
System Mode Register	SYM	R/W	A dynamic global interrupt processing enables/disables, fast interrupt processing, and external interface control (an external memory interface is not implemented in the S3F80Q5 microcontroller).

5.1.7 Interrupt Processing Control Points

Interrupt processing can therefore be controlled in two ways: globally or by a specific interrupt level and source. The system-level control points in the interrupt structure are, therefore:

- Global interrupt enable and disable (by EI and DI instructions or by a direct manipulation of SYM.0)
- Interrupt level enable/disable settings (IMR register)
- Interrupt level priority settings (IPR register)
- Interrupt source enable/disable settings in the corresponding peripheral control registers

NOTE: When writing the part of your application program that handles the interrupt processing, be sure to include the necessary register file address (register pointer) information.

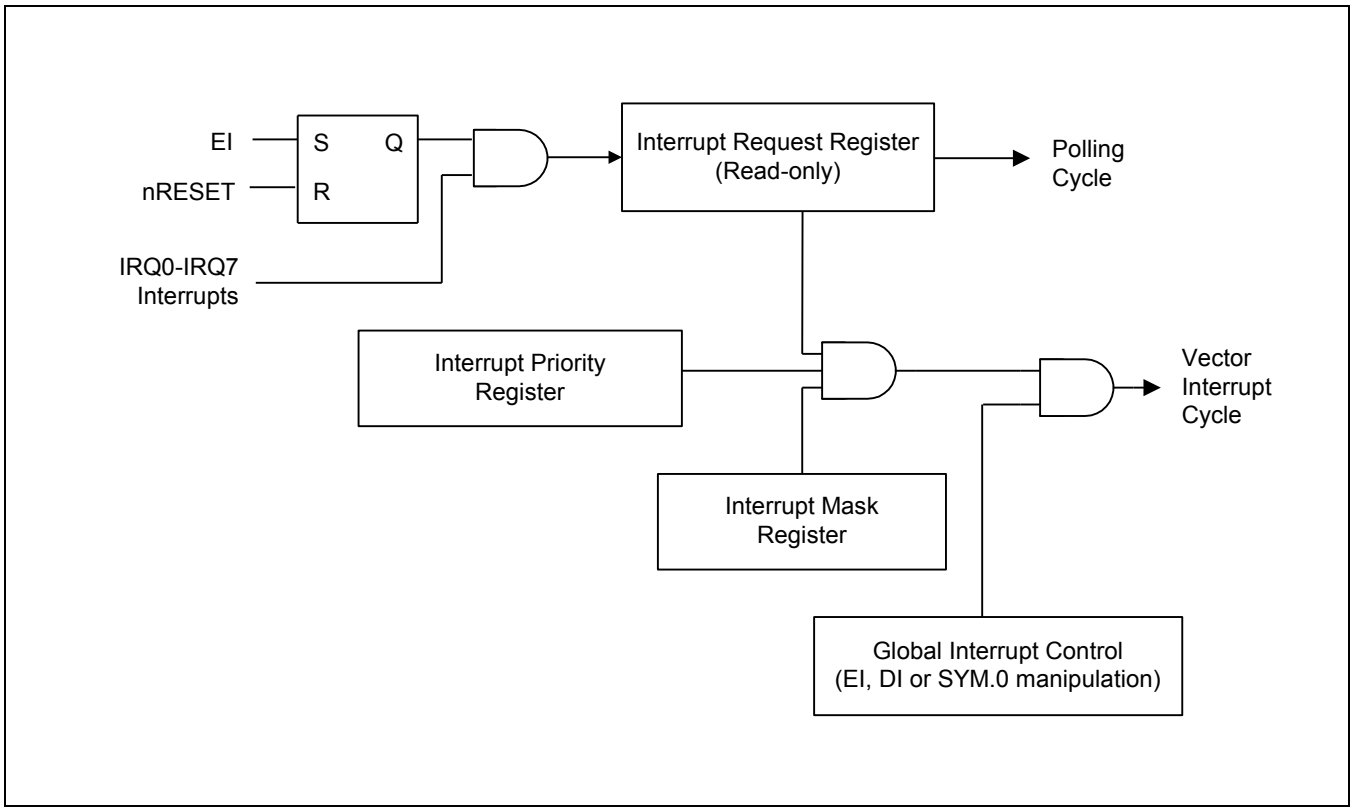

Figure 5-4 Interrupt Function Diagram

5.1.8 Peripheral Interrupt Control Registers

For each interrupt source there is one or more corresponding peripheral control registers that let you control the interrupt generated by that peripheral; (see *Table 5-3*).

Table 5-3 Vectored Interrupt Source Control and Data Registers

Interrupt Source	Interrupt Level	Register(s)	Location(s) in Set 1	Bank
Timer 0 match/capture or Timer 0 overflow	IRQ0	T0CON (NOTE) T0DATA	D2H D1H	Bank 0
Timer 1 match/capture or Timer 1 overflow	IRQ1	T1CON (NOTE) T1DATAH, T1DATAL	FAH F8H, F9H	Bank 0
Counter A or FRT match or SPI interrupt	IRQ2	CACON CADATAH, CADATAL FRTCON FRTDATA2/1/0 SPICON SPISTAT, SPIDATA	F3H F4H, F5H FCH F9H, FAH, FBH E9H EAH, EBH	Bank 0 Bank 1
Timer 2 match/capture or Timer 2 overflow	IRQ3	T2CON (NOTE) T2DATAH, T2DATAL	E8H E6H, E7H	Bank 1
P0.7 external interrupt P0.6 external interrupt P0.5 external interrupt P0.4 external interrupt	IRQ7	P0CONH P0INT P0PND	E8H F1H F2H	Bank 0
P0.3 external interrupt P0.2 external interrupt P0.1 external interrupt P0.0 external interrupt	IRQ6	P0CONL P0INT P0PND	E9H F1H F2H	Bank 0
P2.0 external interrupt	IRQ4	P2CONL P2INT P2PND	EDH E5H E6H	Bank 0

NOTE:

1. Because the timer 0, timer1 and timer 2 overflow interrupts are cleared by hardware, the T0CON, T1CON and T2CON registers control only the enable/disable functions. The T0CON, T1CON and T2CON registers contain enable/disable and pending bits for the timer 0, timer 1 and timer 2 match/capture interrupts, respectively.
2. If a interrupt is un-mask (Enable interrupt level) in the IMR register, the pending bit and enable bit of the interrupt should be written after a DI instruction is executed.
3. P0.3-P0.5, P2.0 external interrupt is for 24-ELP package only.

5.1.9 System Mode Register (SYM)

The system mode register, SYM (DEH, Set 1, Bank 0), is used to globally enable and disable interrupt processing and to control fast interrupt processing; (see *Figure 5-5*).

A reset clears SYM.7, SYM.1, and SYM.0 to "0". The 3-bit value, SYM.4-SYM.2, is for fast interrupt level selection and undetermined values after reset. SYM.6 and SYM5 are not used.

The instructions EI and DI enable and disable global interrupt processing, respectively, by modifying the bit 0 value of the SYM register. An Enable Interrupt (EI) instruction must be included in the initialization routine, which follows a reset operation, in order to enable interrupt processing. Although you can manipulate SYM.0 directly to enable and disable interrupts during normal operation, we recommend using the EI and DI instructions for this purpose.

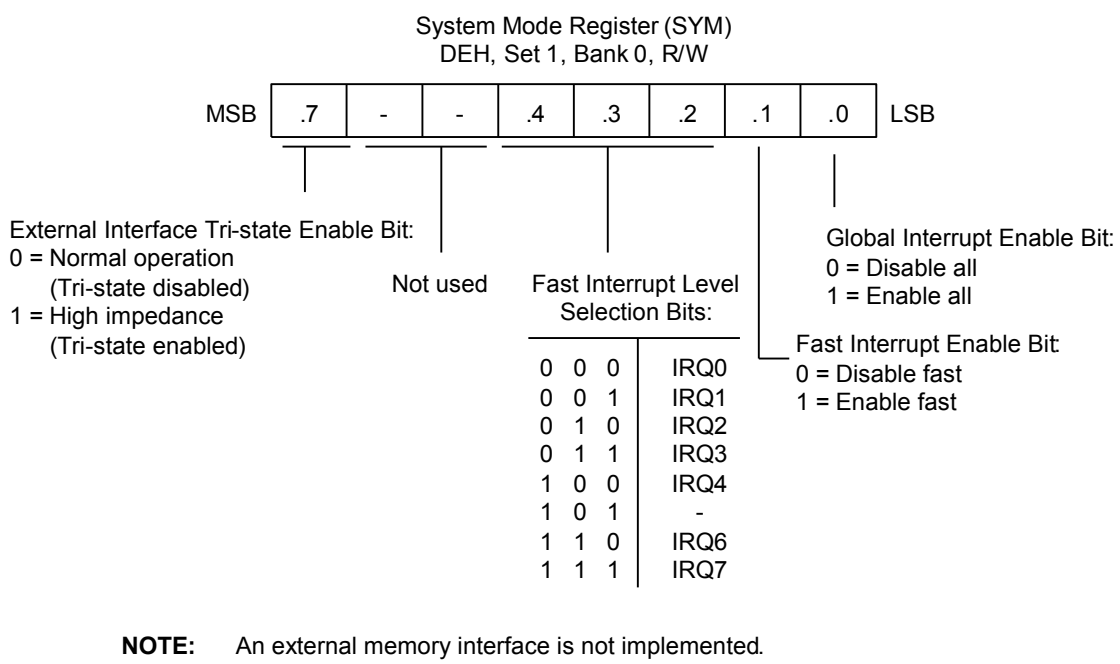

NOTE: An external memory interface is not implemented.

Figure 5-5 System Mode Register (SYM)

5.1.10 Interrupt Mask Register (IMR)

The interrupt mask register, IMR (DDH, Set 1, and Bank 0) is used to enable or disable interrupt processing for individual interrupt levels. After a reset, all IMR bit values are undetermined and must therefore be written to their required settings by the initialization routine.

Each IMR bit corresponds to a specific interrupt level: bit 1 to IRQ1, bit 2 to IRQ2, and so on. When the IMR bit of an interrupt level is cleared to "0", interrupt processing for that level is disabled (masked). When you set a level's IMR bit to "1", interrupt processing for the level is enabled (not masked).

The IMR register is mapped to register location DDH in set 1 and Bank 0. Bit values can be read and written by instructions using the register addressing mode.

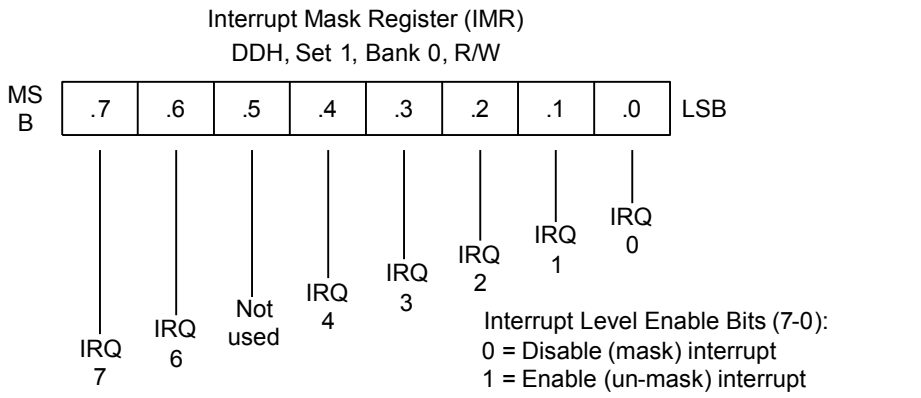

NOTE: Before IMR register is changed to any value, all interrupts must be disable. Using DI instruction is recommended.

Figure 5-6 Interrupt Mask Register (IMR)

5.1.11 Interrupt Priority Register (IPR)

The interrupt priority register, IPR (FFH, Set 1, Bank 0), is used to set the relative priorities of the interrupt levels used in the microcontroller's interrupt structure. After a reset, all IPR bit values are undetermined and must therefore be written to their required settings by the initialization routine.

When more than one interrupt source is active, the source with the highest priority level is serviced first. If both sources belong to the same interrupt level, the source with the lowest vector address usually has priority (This priority is fixed in hardware).

To support programming of the relative interrupt level priorities, they are organized into groups and subgroups by the interrupt logic. Please note that these groups (and subgroups) are used only by IPR logic for the IPR register priority definitions; (see *Figure 5-7*):

- Group A IRQ0, IRQ1
- Group B IRQ2, IRQ3, IRQ4
- Group C IRQ6, IRQ7

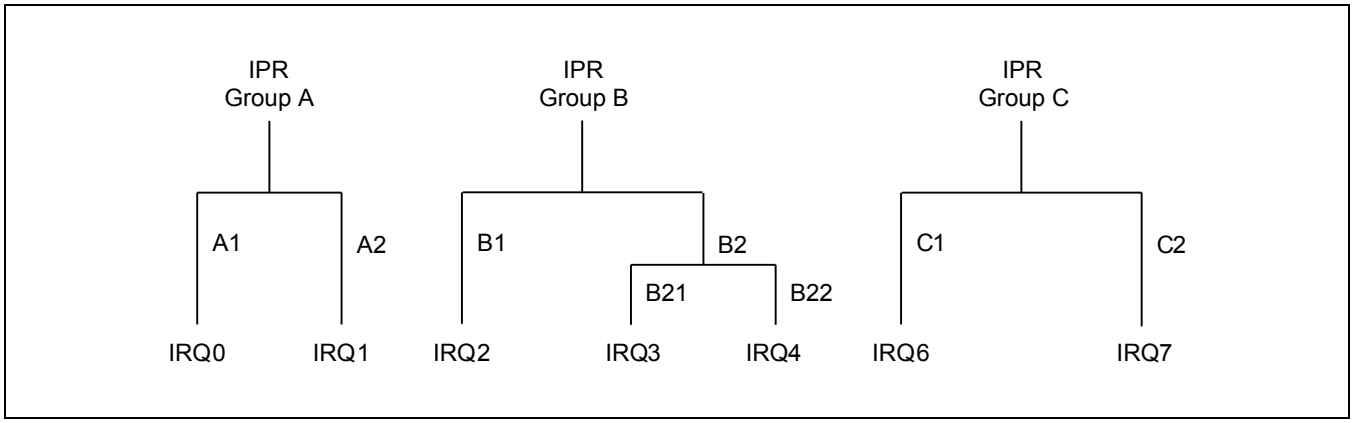

Figure 5-7 Interrupt Request Priority Groups

As you can see in *Figure 5-8*, IPR.7, IPR.4, and IPR.1 control the relative priority of interrupt groups A, B, and C. For example, the setting "001B" for these bits would select the group relationship B > C > A; the setting "101B" would select the relationship C > B > A.

The functions of the other IPR bit settings are as follows:

- Interrupt group B has a subgroup to provide an additional priority relationship between for interrupt levels 2, 3, and 4. IPR.3 defines the possible subgroup B relationships. IPR.2 controls interrupt group B.
- IPR.0 controls the relative priority setting of IRQ0 and IRQ1 interrupts.

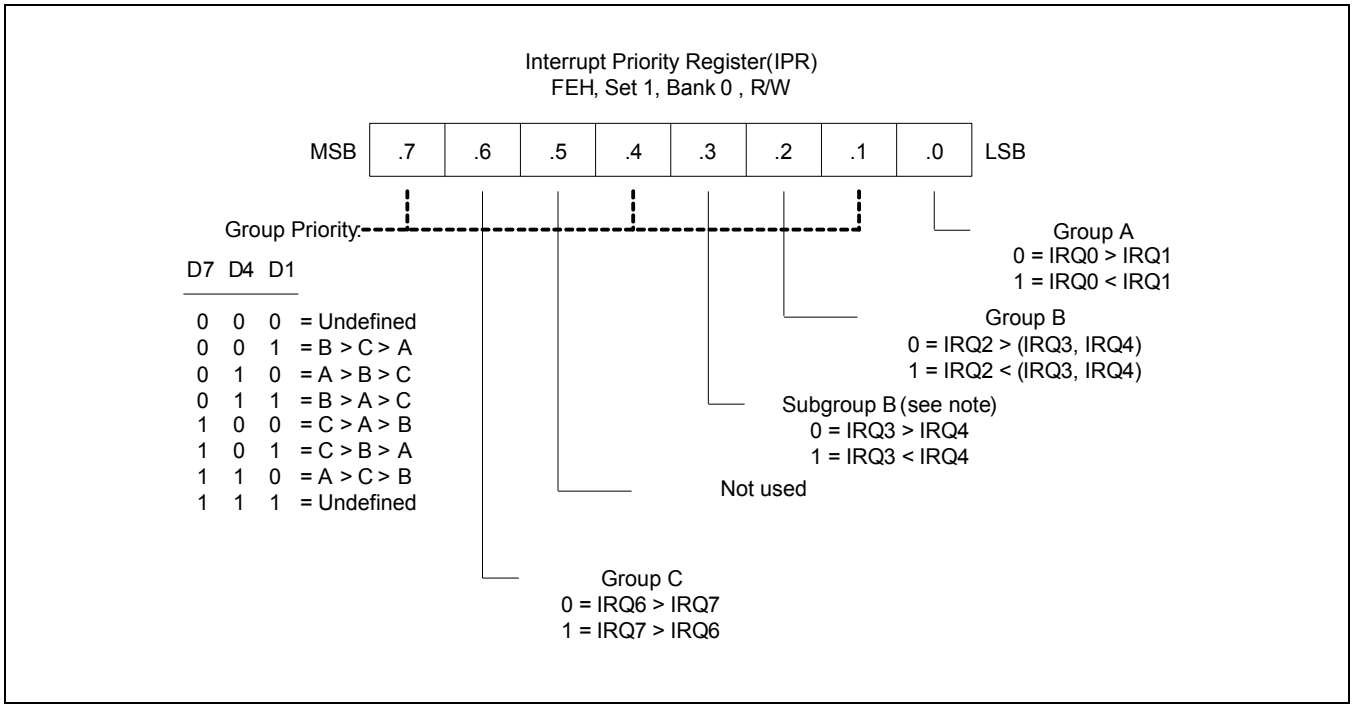

Figure 5-8 Interrupt Priority Register (IPR)

5.1.12 Interrupt Request Register (IRQ)

You can poll bit values in the interrupt request register, IRQ (DCH, Set 1, Bank 0), to monitor interrupt request status for all levels in the microcontroller's interrupt structure. Each bit corresponds to the interrupt level of the same number: bit 0 to IRQ0, bit 1 to IRQ1, and so on. A "0" indicates that no interrupt request is currently being issued for that level; a "1" indicates that an interrupt request has been generated for that level.

IRQ bit values are read-only addressable using Register addressing mode. You can read (test) the contents of the IRQ register at any time using bit or byte addressing to determine the current interrupt request status of specific interrupt levels. After a reset, all IRQ status bits are cleared to "0"

You can poll IRQ register values even if a DI instruction has been executed (that is, if global interrupt processing is disabled). If an interrupt occurs while the interrupt structure is disabled, the CPU will not service it. You can, however, still detect the interrupt request by polling the IRQ register. In this way, you can determine which events occurred while the interrupt structure was globally disabled.

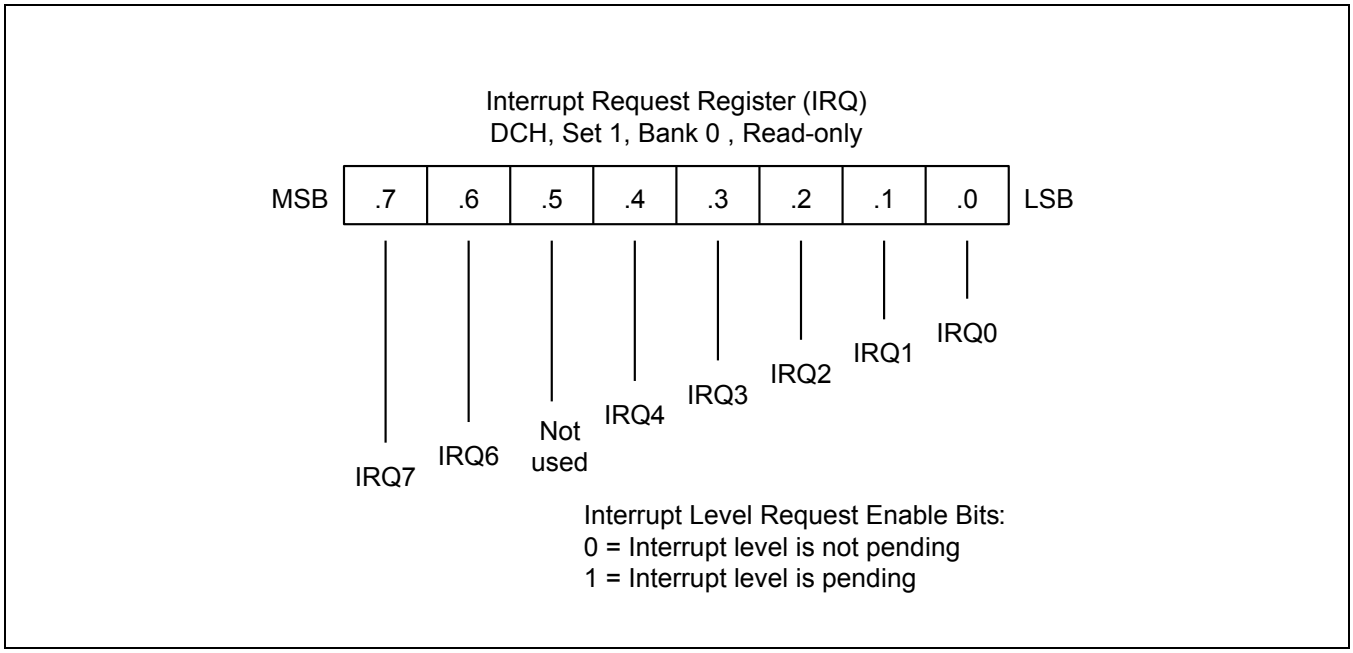

Figure 5-9 Interrupt Request Register (IRQ)

5.1.13 Interrupt Pending Function Types

5.1.13.1 Overview

There are two types of interrupt pending bits: One type is automatically cleared by hardware after the interrupt service routine is acknowledged and executed; the other type must be cleared by the interrupt service routine.

5.1.13.2 Pending Bits Cleared Automatically by Hardware

For interrupt pending bits that are cleared automatically by hardware, interrupt logic sets the corresponding pending bit to "1" when a request occurs. It then issues an IRQ pulse to inform the CPU that an interrupt is waiting to be serviced. The CPU acknowledges the interrupt source by sending an IACK, executes the service routine, and clears the pending bit to "0". This type of pending bit is not mapped and cannot, therefore, be read or written by application software.

In the S3F80Q5 interrupt structure, the timer 0 overflow interrupt (IRQ0), the timer 1 overflow interrupt (IRQ1) and the counter A interrupt (IRQ2) belong to this category of interrupts whose pending condition is cleared automatically by hardware.

5.1.13.3 Pending Bits Cleared by the Service Routine

The second type of pending bit must be cleared by program software. The service routine must clear the appropriate pending bit before a return-from-interrupt subroutine (IRET) occurs. To do this, a "0" must be written to the corresponding pending bit location in the source’s mode or control register.

In the S3F80Q5 interrupt structure, pending conditions for all interrupt sources except the timer 0 overflow interrupt, the timer 1 overflow interrupt and the counter A borrow interrupt, must be cleared by the interrupt service routine.

5.1.14 Interrupt Source Polling Sequence

The interrupt request polling and servicing sequence is as follows:

1. A source generates an interrupt request by setting the interrupt request bit to "1".
2. The CPU polling procedure identifies a pending condition for that source.
3. The CPU checks the interrupt level of source.
4. The CPU generates an interrupt acknowledge signal.
5. Interrupt logic determines the interrupt's vector address.
6. The service routine starts and the source's pending bit is cleared to "0" (by hardware or by software).
7. The CPU continues polling for interrupt requests.

5.1.15 Interrupt Service Routines

Before an interrupt request can be serviced, the following conditions must be met:

- Interrupt processing must be globally enabled (EI, SYM.0 = "1")
- The interrupt level must be enabled (IMR register-unmask)
- The interrupt level must have the highest priority if more than one level is currently requesting service
- The interrupt must be enabled at the interrupt's source (peripheral control register)

If all of the above conditions are met, the interrupt request is acknowledged at the end of the instruction cycle.

The CPU then initiates an interrupt machine cycle that completes the following processing sequence:

1. Reset (clear to "0") the interrupt enable bit in the SYM register (SYM.0) to disable all subsequent interrupts.
2. Save the program counter (PC) and status flags to the system stack.
3. Branch to the interrupt vector to fetch the address of the service routine.
4. Pass control to the interrupt service routine.

When the interrupt service routine is completed, the CPU issues an Interrupt Return (IRET). The IRET restores the PC and status flags and sets SYM.0 to "1", allowing the CPU to process the next interrupt request.

5.1.16 Generating interrupt Vector Addresses

The interrupt vector area in the ROM (except Smart Option ROM Cell- 003CH, 003DH, 003EH and 003FH) contains the addresses of interrupt service routines that correspond to each level in the interrupt structure. Vectored interrupt processing follows this sequence:

1. Push the program counter's low-byte value to the stack.
2. Push the program counter's high-byte value to the stack.
3. Push the FLAG register values to the stack.
4. Fetch the service routine's high-byte address from the vector location.
5. Fetch the service routine's low-byte address from the vector location.
6. Branch to the service routine specified by the concatenated 16-bit vector address.

NOTE: A 16-bit vector address always begins at an even-numbered ROM address within the range 00H–FFH.

5.1.17 Nesting of Vectored Interrupts

It is possible to nest a higher-priority interrupt request while a lower-priority request is being serviced. To do this, you must follow these steps:

1. Push the current 8-bit interrupt mask register (IMR) value to the stack (PUSH IMR).
2. Load the IMR register with a new mask value that enables only the higher priority interrupt.
3. Execute an EI instruction to enable interrupt processing (a higher priority interrupt will be processed if it occurs).
4. When the lower-priority interrupt service routine ends, restore the IMR to its original value by returning the previous mask value from the stack (POP IMR).
5. Execute an IRET.

Depending on the application, you may be able to simplify the above procedure to some extent.

5.1.18 Instruction Pointer (IP)

The instruction pointer (IP) is used by all S3C8/S3F8-series microcontrollers to control the optional high-speed interrupt processing feature called fast interrupts. The IP consists of register pair IPH (DAH Set 1 Bank 0) and IPL (DBH Set 1 Bank 0). The IP register names are IPH (high byte, IP15–IP8) and IPL (low byte, IP7–IP0).

5.1.19 Fast Interrupt Processing

The feature called fast interrupt processing lets you specify that an interrupt within a given level be completed in approximately six clock cycles instead of the usual 22 clock cycles. To select a specific interrupt level for fast interrupt processing, you write the appropriate 3-bit value to SYM.4–SYM.2. Then, to enable fast interrupt processing for the selected level, you set SYM.1 to "1"

Two other system registers support fast interrupt processing:

- The instruction pointer (IP) contains the starting address of the service routine (and is later used to swap the program counter values), and
- When a fast interrupt occurs, the contents of the FLAGS register are stored in an unmapped, dedicated register called FLAGS' ("FLAGS prime").

NOTE: For the S3F80Q5 microcontroller, the service routine for any one of the seven interrupt levels: IRQ0–IRQ7 (IRQ5 is reserved for S3F80Q5), can be selected for fast interrupt processing.

5.1.19.1 Procedure for Initiating Fast Interrupt

To initiate fast interrupt processing, follow these steps:

1. Load the start address of the service routine into the instruction pointer (IP).
2. Load the interrupt level number (IRQn) into the fast interrupt selection field (SYM.4–SYM.2)
3. Write a "1" to the fast interrupt enable bit in the SYM register.

5.1.19.2 Fast Interrupt Service Routine

When an interrupt occurs in the level selected for fast interrupt processing, the following events occur:

1. The contents of the instruction pointer and the PC are swapped.
2. The FLAG register values are written to the FLAGS' ("FLAGS prime") register.
3. The fast interrupt status bit in the FLAGS register is set.
4. The interrupt is serviced.
5. Assuming that the fast interrupt status bit is set, when the fast interrupt service routine ends, the instruction pointer and PC values are swapped back.
6. The content of FLAGS' ("FLAGS prime") is copied automatically back to the FLAGS register.
7. The fast interrupt status bit in FLAGS is cleared automatically.

5.1.19.3 Programming Guidelines

Remember that the only way to enable/disable a fast interrupt is to set/clear the fast interrupt enable bit in the SYM register, SYM.1. Executing an EI or DI instruction globally enables or disables all interrupt processing, including fast interrupts. If you use fast interrupts, remember to load the IP with a new start address when the fast interrupt service routine ends.

6 Instruction Set

6.1 Overview

The SAM8 instruction set is specifically designed to support the large register files that are typical of most SAM8 microcontrollers. There are 78 instructions.

The powerful data manipulation capabilities and features of the instruction set include:

- A full complement of 8-bit arithmetic and logic operations, including multiply and divide
- No special I/O instructions (I/O control/data registers are mapped directly into the register file)
- Decimal adjustment included in binary-coded decimal (BCD) operations
- 16-bit (word) data can be incremented and decremented
- Flexible instructions for bit addressing, rotate, and shift operations

6.1.1 Data Types

The SAM8 CPU performs operations on bits, bytes, BCD digits, and two-byte words. Bits in the register file can be set, cleared, complemented and tested. Bits within a byte are numbered from 7 to 0, where bit 0 is the least significant (right-most) bit.

6.1.2 Register Addressing

To access an individual register, an 8-bit address in the range 0 – 255 or the 4-bit address of a working register is specified. Paired registers can be used to construct 16-bit data or 16-bit program memory or data memory addresses. For detailed information about register addressing, please refer to Chapter 2 "Address Spaces."

6.1.3 Addressing Modes

There are seven explicit addressing modes: Register (R), Indirect Register (IR), Indexed (X), Direct (DA), Relative (RA), Immediate (IM) and Indirect (IA). For detailed descriptions of these addressing modes, please refer to Chapter 3 "Addressing Modes."

Table 6-1 Instruction Group Summary

Mnemonic	Operands	Instruction
Load Instructions		
CLR	dst	Clear
LD	dst, src	Load
LDB	dst, src	Load bit
LDE	dst, src	Load external data memory
LDC	dst, src	Load program memory
LDED	dst, src	Load external data memory and decrement
LDCD	dst, src	Load program memory and decrement
LDEI	dst, src	Load external data memory and increment
LDCI	dst, src	Load program memory and increment
LDEPD	dst, src	Load external data memory with pre-decrement
LDCPD	dst, src	Load program memory with pre-decrement
LDEPI	dst, src	Load external data memory with pre-increment
LDCPI	dst, src	Load program memory with pre-increment
LDW	dst, src	Load word
POP	dst	Pop from stack
POPUD	dst, src	Pop user stack (decrementing)
POPUI	dst, src	Pop user stack (incrementing)
PUSH	Src	Push to stack
PUSHUD	dst, src	Push user stack (decrementing)
PUSHUI	dst, src	Push user stack (incrementing)
Arithmetic Instructions		
ADC	dst,src	Add with carry
ADD	dst,src	Add
CP	dst,src	Compare
DA	dst	Decimal adjust
DEC	dst	Decrement
DECW	dst	Decrement word
DIV	dst,src	Divide
INC	dst	Increment
INCW	dst	Increment word
MULT	dst,src	Multiply
SBC	dst,src	Subtract with carry
SUB	dst,src	Subtract

Mnemonic	Operands	Instruction
Logic Instructions		
AND	dst,src	Logical AND
COM	dst	Complement
OR	dst,src	Logical OR
XOR	dst,src	Logical exclusive OR
Program Control Instructions		
BTJRF	dst,src	Bit test and jump relative on false
BTJRT	dst,src	Bit test and jump relative on true
CALL	dst	Call procedure
CPIJE	dst,src	Compare, increment and jump on equal
CPIJNE	dst,src	Compare, increment and jump on non-equal
DJNZ	r,dst	Decrement register and jump on non-zero
ENTER	–	Enter
EXIT	–	Exit
IRET	–	Interrupt return
JP	cc,dst	Jump on condition code
JP	dst	Jump unconditional
JR	cc,dst	Jump relative on condition code
NEXT	–	Next
RET	–	Return
WFI	–	Wait for interrupt
Bit Manipulation Instructions		
BAND	dst,src	Bit AND
BCP	dst,src	Bit compare
BITC	dst	Bit complement
BITR	dst	Bit reset
BITS	dst	Bit set
BOR	dst,src	Bit OR
BXOR	dst,src	Bit XOR
TCM	dst,src	Test complement under mask
TM	dst,src	Test under mask
Rotate and Shift Instructions		
RL	dst	Rotate left
RLC	dst	Rotate left through carry
RR	dst	Rotate right
RRC	dst	Rotate right through carry
SRA	dst	Shift right arithmetic
SWAP	dst	Swap nibbles
CPU Control Instructions		

Mnemonic	Operands	Instruction
CCF	–	Complement carry flag
DI	–	Disable interrupts
EI	–	Enable interrupts
IDLE	–	Enter Idle mode
NOP	–	No operation
RCF	–	Reset carry flag
SB0	–	Set bank 0
SB1	–	Set bank 1
SCF	–	Set carry flag
SRP	src	Set register pointers
SRP0	src	Set register pointer 0
SRP1	src	Set register pointer 1
STOP	–	Enter Stop Mode

6.2 Flags Register (FLAGS)

The flags register FLAGS contains eight bits that describe the current status of CPU operations. Four of these bits, FLAGS.7-FLAGS.4, can be tested and used with conditional jump instructions; two others FLAGS.3 and FLAGS.2 are used for BCD arithmetic.

The FLAGS register also contains a bit to indicate the status of fast interrupt processing (FLAGS.1) and a bank address status bit (FLAGS.0) to indicate whether bank 0 or bank 1 is currently being addressed. FLAGS register can be set or reset by instructions as long as its outcome does not affect the flags, such as, Load instruction.

Logical and Arithmetic instructions such as, AND, OR, XOR, ADD, and SUB can affect the Flags register. For example, the AND instruction updates the Zero, Sign and Overflow flags based on the outcome of the AND instruction. If the AND instruction uses the Flags register as the destination, then simultaneously, two write will occur to the Flags register producing an unpredictable result.

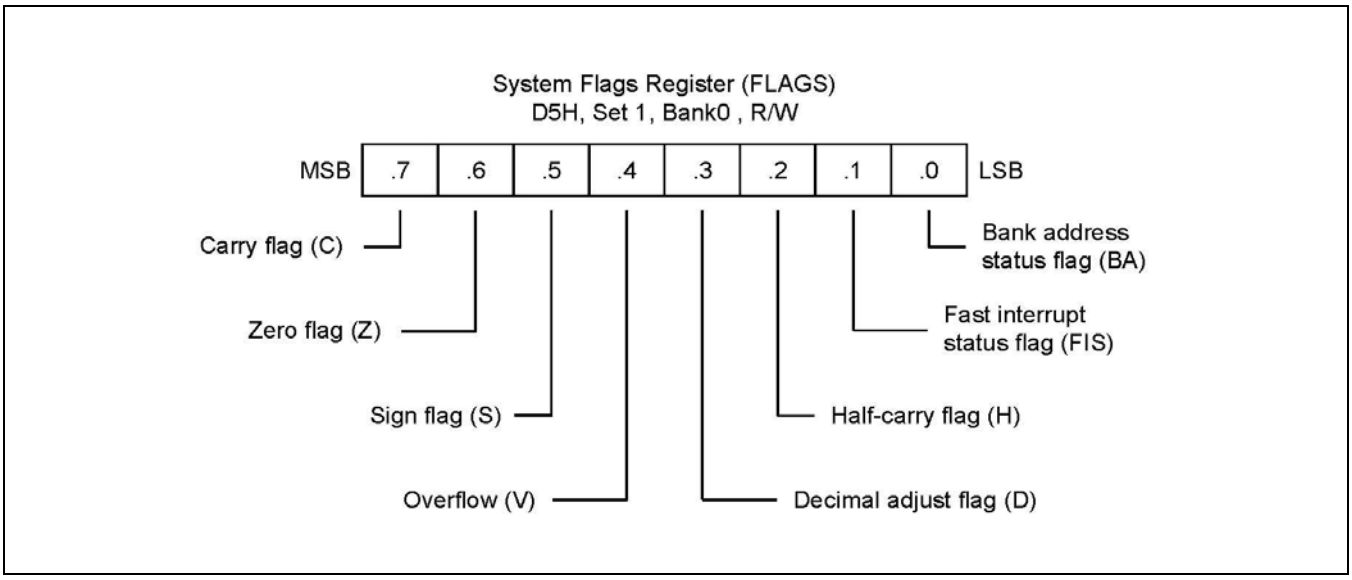

Figure 6-1 System Flags Register (FLAGS)

6.2.1 Flag Descriptions

C

Carry Flag (FLAGS.7)

The C flag is set to "1" if the result from an arithmetic operation generates a carry-out from or a borrow to the bit 7 position (MSB). After rotate and shift operations, it contains the last value shifted out of the specified register. Program instructions can set, clear, or complement the carry flag.

Z

Zero Flag (FLAGS.6)

For arithmetic and logic operations, the Z flag is set to "1" if the result of the operation is zero. For operations that test register bits, and for shift and rotate operations, the Z flag is set to "1" if the result is logic zero.

S

Sign Flag (FLAGS.5)

Following arithmetic, logic, rotate, or shift operations, the sign bit identifies the state of the MSB of the result. A logic zero indicates a positive number and a logic one indicates a negative number.

V

Overflow Flag (FLAGS.4)

The V flag is set to "1" when the result of a two's-complement operation is greater than + 127 or less than – 128. It is also cleared to "0" following logic operations.

D

Decimal Adjust Flag (FLAGS.3)

The DA bit is used to specify what type of instruction was executed last during BCD operations, so that a subsequent decimal adjust operation can execute correctly. The DA bit is not usually accessed by programmers, and cannot be used as a test condition.

H

Half-Carry Flag (FLAGS.2)

The H bit is set to "1" whenever an addition generates a carry-out of bit 3, or when a subtraction borrows out of bit 4. It is used by the Decimal Adjust (DA) instruction to convert the binary result of a previous addition or subtraction into the correct decimal (BCD) result. The H flag is seldom accessed directly by a program.

FIS

Fast Interrupt Status Flag (FLAGS.1)

The FIS bit is set during a fast interrupt cycle and reset during the IRET following interrupt servicing. When set, it inhibits all interrupts and causes the fast interrupt return to be executed when the IRET instruction is executed.

BA

Bank Address Flag (FLAGS.0)

The BA flag indicates which register bank in the set 1 area of the internal register file is currently selected, bank 0 or bank 1. The BA flag is cleared to "0" (select bank 0) when you execute the SB0 instruction and is set to "1" (select bank 1) when you execute the SB1 instruction.

6.2.2 Instruction Set Notation

Table 6-2 Flag Notation Conventions

Flag	Description
C	Carry flag
Z	Zero flag
S	Sign flag
V	Overflow flag
D	Decimal-adjust flag
H	Half-carry flag
0	Cleared to logic zero
1	Set to logic one
*	Set or cleared according to operation
–	Value is unaffected
x	Value is undefined

Table 6-3 Instruction Set Symbols

Symbol	Description
dst	Destination operand
src	Source operand
@	Indirect register address prefix
PC	Program counter
IP	Instruction pointer
FLAGS	Flags register (D5H)
RP	Register pointer
#	Immediate operand or register address prefix
H	Hexadecimal number suffix
D	Decimal number suffix
B	Binary number suffix
opc	Opcode

Table 6-4 Instruction Notation Conventions

Notation	Description	Actual Operand Range
cc	Condition code	See list of condition codes in *Table 6-7*.
r	Working register only	Rn (n = 0 – 15)
rb	Bit (b) of working register	Rn.b (n = 0 – 15, b = 0 – 7)
r0	Bit 0 (LSB) of working register	Rn (n = 0 – 15)
rr	Working register pair	RRp (p = 0, 2, 4, ..., 14)
R	Register or working register	reg or Rn (reg = 0 – 255, n = 0 – 15)
Rb	Bit 'b' of register or working register	reg.b (reg = 0 – 255, b = 0 – 7)
RR	Register pair or working register pair	reg or RRp (reg = 0 – 254, even number only, where p = 0, 2, ..., 14)
IA	Indirect addressing mode	addr (addr = 0 – 254, even number only)
Ir	Indirect working register only	@Rn (n = 0 – 15)
IR	Indirect register or indirect working register	@Rn or @reg (reg = 0 – 255, n = 0 – 15)
Irr	Indirect working register pair only	@RRp (p = 0, 2, ..., 14)
IRR	Indirect register pair or indirect working register pair	@RRp or @reg (reg = 0 – 254, even only, where p = 0, 2, ..., 14)
X	Indexed addressing mode	#reg [Rn] (reg = 0 – 255, n = 0 – 15)
XS	Indexed (short offset) addressing mode	#addr[RRp] (addr = range –128 to +127, where p = 0, 2, ..., 14)
xl	Indexed (long offset) addressing mode	#addr[RRp] (addr = range 0 – 65535, where p = 0, 2, ..., 14)
da	Direct addressing mode	addr (addr = range 0 – 65535)
ra	Relative addressing mode	addr (addr = number in the range +127 to – 128 that is an offset relative to the address of the next instruction)
im	Immediate addressing mode	#data (data = 0 – 255)
iml	Immediate (long) addressing mode	#data (data = range 0 – 65535)

Table 6-5 Opcode Quick Reference (0 – 7)

OPCODE MAP									
LOWER NIBBLE (HEX)									
	–	0	1	2	3	4	5	6	7
U	0	DEC R1	DEC IR1	ADD r1,r2	ADD r1,Ir2	ADD R2,R1	ADD IR2,R1	ADD R1,IM	BOR r0–Rb
P	1	RLC R1	RLC IR1	ADC r1,r2	ADC r1,Ir2	ADC R2,R1	ADC IR2,R1	ADC R1,IM	BCP r1.b, R2
P	2	INC R1	INC IR1	SUB r1,r2	SUB r1,Ir2	SUB R2,R1	SUB IR2,R1	SUB R1,IM	BXOR r0–Rb
E	3	JP IRR1	SRP/0/1 IM	SBC r1,r2	SBC r1,Ir2	SBC R2,R1	SBC IR2,R1	SBC R1,IM	BTJR r2.b, RA
R	4	DA R1	DA IR1	OR r1,r2	OR r1,Ir2	OR R2,R1	OR IR2,R1	OR R1,IM	LDB r0–Rb
	5	POP R1	POP IR1	AND r1,r2	AND r1,Ir2	AND R2,R1	AND IR2,R1	AND R1,IM	BITC r1.b
N	6	COM R1	COM IR1	TCM r1,r2	TCM r1,Ir2	TCM R2,R1	TCM IR2,R1	TCM R1,IM	BAND r0–Rb
I	7	PUSH R2	PUSH IR2	TM r1,r2	TM r1,Ir2	TM R2,R1	TM IR2,R1	TM R1,IM	BIT r1.b
B	8	DECW RR1	DECW IR1	PUSHUD IR1,R2	PUSHUI IR1,R2	MULT R2,RR1	MULT IR2,RR1	MULT IM,RR1	LD r1, x, r2
B	9	RL R1	RL IR1	POPUD IR2,R1	POPUI IR2,R1	DIV R2,RR1	DIV IR2,RR1	DIV IM,RR1	LD r2, x, r1
L	A	INCW RR1	INCW IR1	CP r1,r2	CP r1,Ir2	CP R2,R1	CP IR2,R1	CP R1,IM	LDC r1, Irr2, xL
E	B	CLR R1	CLR IR1	XOR r1,r2	XOR r1,Ir2	XOR R2,R1	XOR IR2,R1	XOR R1,IM	LDC r2, Irr2, xL
	C	RRC R1	RRC IR1	CPIJE Ir,r2,RA	LDC r1,Irr2	LDW RR2,RR1	LDW IR2,RR1	LDW RR1,IML	LD r1, Ir2
H	D	SRA R1	SRA IR1	CPIJNE Irr,r2,RA	LDC r2,Irr1	CALL IA1		LD IR1,IM	LD Ir1, r2
E	E	RR R1	RR IR1	LDCD r1,Irr2	LDCI r1,Irr2	LD R2,R1	LD R2,IR1	LD R1,IM	LDC r1, Irr2, xs
X	F	SWAP R1	SWAP IR1	LDCPD r2,Irr1	LDCPI r2,Irr1	CALL IRR1	LD IR2,R1	CALL DA1	LDC r2, Irr1, xs

Table 6-6 Opcode Quick Reference (8 – F)

OPCODE MAP									
LOWER NIBBLE (HEX)									
	–	**8**	**9**	**A**	**B**	**C**	**D**	**E**	**F**
U	0	LD r1,R2	LD r2,R1	DJNZ r1,RA	JR cc,RA	LD r1,IM	JP cc,DA	INC r1	NEXT
P	1	↓	↓	↓	↓	↓	↓	↓	ENTER
P	2	–	–	–	–	–	–	–	EXIT
E	3	–	–	–	–	–	–	–	WFI
R	4	–	–	–	–	–	–	–	SB0
	5	–	–	–	–	–	–	–	SB1
N	6	–	–	–	–	–	–	–	IDLE
I	7	↓	↓	↓	↓	↓	↓	↓	STOP
B	8	–	–	–	–	–	–	–	DI
B	9	–	–	–	–	–	–	–	EI
L	A	–	–	–	–	–	–	–	RET
E	B	–	–	–	–	–	–	–	IRET
	C	–	–	–	–	–	–	–	RCF
H	D	↓	↓	↓	↓	↓	↓	↓	SCF
E	E	–	–	–	–	–	–	–	CCF
X	F	LD r1,R2	LD r2,R1	DJNZ r1,RA	JR cc,RA	LD r1,IM	JP cc,DA	INC r1	NOP

6.2.3 Condition Codes

The op-code of a conditional jump always contains a 4-bit field called the condition code (cc). This specifies under which conditions it is to execute the jump. For example, a conditional jump with the condition code for "equal" after a compare operation only jumps if the two operands are equal. Condition codes are listed in *Table 6-7*.

The carry (C), zero (Z), sign (S), and overflow (V) flags are used to control the operation of conditional jump instructions.

Table 6-7 Condition Codes

Mnemonic	Binary	Description	Flags Set
F	0000	Always false	–
T	1000	Always true	–
C	0111 (NOTE)	Carry	C = 1
NC	1111 (NOTE)	No carry	C = 0
Z	0110 (NOTE)	Zero	Z = 1
NZ	1110 (NOTE)	Not zero	Z = 0
PL	1101	Plus	S = 0
MI	0101	Minus	S = 1
OV	0100	Overflow	V = 1
NOV	1100	No overflow	V = 0
EQ	0110 (NOTE)	Equal	Z = 1
NE	1110 (NOTE)	Not equal	Z = 0
GE	1001	Greater than or equal	(S XOR V) = 0
LT	0001	Less than	(S XOR V) = 1
GT	1010	Greater than	(Z OR (S XOR V)) = 0
LE	0010	Less than or equal	(Z OR (S XOR V)) = 1
UGE	1111 (NOTE)	Unsigned greater than or equal	C = 0
ULT	0111 (NOTE)	Unsigned less than	C = 1
UGT	1011	Unsigned greater than	(C = 0 AND Z = 0) = 1
ULE	0011	Unsigned less than or equal	(C OR Z) = 1

NOTE:

1. It indicates condition codes that are related to two different mnemonics but which test the same flag. For example, Z and EQ are both true if the zero flag (Z) is set, but after an ADD instruction, Z would probably be used; after a CP instruction, however, EQ would probably be used.
2. For operations involving unsigned numbers, the special condition codes UGE, ULT, UGT, and ULE must be used.

6.3 Instruction Descriptions

This section contains detailed information and programming examples for each instruction in the SAM8 instruction set. Information is arranged in a consistent format for improved readability and for fast referencing. The following information is included in each instruction description:

- Instruction name (mnemonic)
- Full instruction name
- Source/destination format of the instruction operand
- Shorthand notation of the instruction's operation
- Textual description of the instruction's effect
- Specific flag settings affected by the instruction
- Detailed description of the instruction's format, execution time, and addressing mode(s)
- Programming example(s) explaining how to use the instruction

6.3.1 ADC-Add with Carry

ADC dst, src

Operation: dst ← dst + src + c

The source operand, along with the setting of the carry flag, is added to the destination operand and the sum is stored in the destination. The contents of the source are unaffected. Two's-complement addition is performed. In multiple precision arithmetic, this instruction permits the carry from the addition of low-order operands to be carried into the addition of high-order operands.

Flags:

C: Set if there is a carry from the most significant bit of the result; cleared otherwise.

Z: Set if the result is "0"; cleared otherwise.

S: Set if the result is negative; cleared otherwise.

V: Set if arithmetic overflow occurs, that is, if both operands are of the same sign and the result is of the opposite sign; cleared otherwise.

D: Always cleared to "0".

H: Set if there is a carry from the most significant bit of the low-order four bits of the result; cleared otherwise.

Format:

	Bytes	Cycles	Opcode (Hex)	Addr Mode dst	Addr Mode src
opc | dst | src	2	4	12	r	r
		6	13	r	Ir
opc | src | dst	3	6	14	R	R
		6	15	R	IR
opc | dst | src	3	6	16	R	IM

Examples: Given: R1 = 10H, R2 = 03H, C flag = "1", register 01H = 20H, register 02H = 03H, and register 03H = 0AH:

```
ADC     R1, R2          →       R1 = 14H, R2 = 03H
ADC     R1, @R2         →       R1 = 1BH, R2 = 03H
ADC     01H, 02H        →       Register 01H = 24H, register 02H = 03H
ADC     01H, @02H       →       Register 01H = 2BH, register 02H = 03H
ADC     01H, #11H       →       Register 01H = 32H
```

In the first example, destination register R1 contains the value 10H, the carry flag is set to "1", and the source working register R2 contains the value 03H. The statement "ADC R1, R2" adds 03H and the carry flag value ("1") to the destination value 10H, leaving 14H in register R1.

6.3.2 ADD-Add

ADD dst, src

Operation: dst ← dst + src

The source operand is added to the destination operand and the sum is stored in the destination. The contents of the source are unaffected. Two's-complement addition is performed.

Flags:

C: Set if there is a carry from the most significant bit of the result; cleared otherwise.

Z: Set if the result is "0"; cleared otherwise.

S: Set if the result is negative; cleared otherwise.

V: Set if arithmetic overflow occurred, that is, if both operands are of the same sign and the result is of the opposite sign; cleared otherwise.

D: Always cleared to "0".

H: Set if a carry from the low-order nibble occurred.

Format:

	Bytes	Cycles	Opcode (Hex)	Addr Mode dst	Addr Mode src
opc | dst | src	2	4	02	r	r
		6	03	r	Ir
opc | src | dst	3	6	04	R	R
		6	05	R	IR
opc | dst | src	3	6	06	R	IM

Examples: Given: R1 = 12H, R2 = 03H, register 01H = 21H, register 02H = 03H, register 03H = 0AH:

```
ADD     R1, R2          →      R1 = 15H, R2 = 03H
ADD     R1, @R2         →      R1 = 1CH, R2 = 03H
ADD     01H, 02H        →      Register 01H = 24H, register 02H = 03H
ADD     01H, @02H       →      Register 01H = 2BH, register 02H = 03H
ADD     01H, #25H       →      Register 01H = 46H
```

In the first example, destination working register R1 contains 12H and the source working register R2 contains 03H. The statement "ADD R1, R2" adds 03H to 12H, leaving the value 15H in register R1.

6.3.3 AND-Logical AND

AND dst, src

Operation: dst ← dst AND src

The source operand is logically ANDed with the destination operand. The result is stored in the destination. The AND operation results in a "1" bit being stored whenever the corresponding bits in the two operands are both logic ones; otherwise a "0" bit value is stored. The contents of the source are unaffected.

Flags:

C: Unaffected.

Z: Set if the result is "0"; cleared otherwise.

S: Set if the result bit 7 is set; cleared otherwise.

V: Always cleared to "0".

D: Unaffected.

H: Unaffected.

Format:

	Bytes	Cycles	Opcode (Hex)	Addr Mode dst	Addr Mode src
opc | dst | src	2	4	52	r	r
		6	53	r	Ir
opc | src | dst	3	6	54	R	R
		6	55	R	IR
opc | dst | src	3	6	56	R	IM

Examples: Given: R1 = 12H, R2 = 03H, register 01H = 21H, register 02H = 03H, register 03H = 0AH:

```
AND     R1, R2          →      R1 = 02H, R2 = 03H
AND     R1, @R2         →      R1 = 02H, R2 = 03H
AND     01H, 02H        →      Register 01H = 01H, register 02H = 03H
AND     01H, @02H       →      Register 01H = 00H, register 02H = 03H
AND     01H, #25H       →      Register 01H = 21H
```

In the first example, destination working register R1 contains the value 12H and the source working register R2 contains 03H. The statement "AND R1, R2" logically ANDs the source operand 03H with the destination operand value 12H, leaving the value 02H in register R1.

6.3.4 BAND-Bit AND

BAND dst, src.b

BAND dst.b, src

Operation: dst(0) ← dst(0) AND src(b)
or
dst(b) ← dst(b) AND src(0)

The specified bit of the source (or the destination) is logically ANDed with the zero bit (LSB) of the destination (or source). The resultant bit is stored in the specified bit of the destination. No other bits of the destination are affected. The source is unaffected.

Flags:

C: Unaffected.

Z: Set if the result is "0"; cleared otherwise.

S: Cleared to "0".

V: Undefined.

D: Unaffected.

H: Unaffected.

Format:

			Bytes	Cycles	Opcode (Hex)	Addr Mode dst	Addr Mode src
opc	dst | b | 0	src	3	6	67	r0	Rb
opc	src | b | 1	dst	3	6	67	Rb	r0

NOTE: In the second byte of the 3 byte instruction formats, the destination (or source) address is four bits, the bit address "b" is three bits, and the LSB address value is one bit in length.

Examples: Given: R1 = 07H and register 01H = 05H:

```
BAND    R1, 01H.1      →      R1 = 06H, register 01H = 05H
BAND    01H.1, R1      →      Register 01H = 05H, R1 = 07H
```

In the first example, source register 01H contains the value 05H (00000101B) and destination working register R1 contains 07H (00000111B). The statement "BAND R1, 01H.1" ANDs the bit 1 value of the source register ("0") with the bit 0 value of register R1 (destination), leaving the value 06H (00000110B) in register R1.

6.3.5 BCP-Bit Compare

BCP dst, src.b

Operation: dst(0) – src(b)

The specified bit of the source is compared to (subtracted from) bit zero (LSB) of the destination. The zero flag is set if the bits are the same; otherwise it is cleared. The contents of both operands are unaffected by the comparison.

Flags:

C: Unaffected.

Z: Set if the two bits are the same; cleared otherwise.

S: Cleared to "0".

V: Undefined.

D: Unaffected.

H: Unaffected.

Format:

	Bytes	Cycles	Opcode (Hex)	Addr Mode dst	Addr Mode src
opc | dst | b | 0 | src	3	6	17	r0	Rb

NOTE: In the second byte of the instruction format, the destination address is four bits, the bit address "b" is three bits, and the LSB address value is one bit in length.

Example: Given: R1 = 07H and register 01H = 01H:

```
BCP    R1, 01H.1      →      R1 = 07H, register 01H = 01H
```

If destination working register R1 contains the value 07H (00000111B) and the source register 01H contains the value 01H (00000001B), the statement "BCP R1, 01H.1" compares bit one of the source register (01H) and bit zero of the destination register (R1). Because the bit values are not identical, the zero flag bit (Z) is cleared in the FLAGS register (0D5H).

6.3.6 BITC-Bit Complement

BITC dst.b

Operation: dst(b) ← NOT dst(b)

This instruction complements the specified bit within the destination without affecting any other bits in the destination.

Flags:

C: Unaffected.

Z: Set if the result is "0"; cleared otherwise.

S: Cleared to "0".

V: Undefined.

D: Unaffected.

H: Unaffected.

Format:

		Bytes	Cycles	Opcode (Hex)	Addr Mode dst
opc	dst | b | 0	2	4	57	rb

NOTE: In the second byte of the instruction format, the destination address is four bits, the bit address "b" is three bits, and the LSB address value is one bit in length.

Example: Given: R1 = 07H

```
BITC    R1.1    →       R1 = 05H
```

If working register R1 contains the value 07H (00000111B), the statement "BITC R1.1" complements bit one of the destination and leaves the value 05H (00000101B) in register R1. Because the result of the complement is not "0", the zero flag (Z) in the FLAGS register (0D5H) is cleared.

6.3.7 BITR-Bit Reset

BITR dst.b

Operation: dst(b) ← 0

The BITR instruction clears the specified bit within the destination without affecting any other bits in the destination.

Flags: No flags are affected.

Format:

		Bytes	Cycles	Opcode (Hex)	Addr Mode dst
opc	dst | b | 0	2	4	77	rb

NOTE: In the second byte of the instruction format, the destination address is four bits, the bit address "b" is three bits, and the LSB address value is one bit in length.

Example: Given: R1 = 07H:

```
BITR   R1.1   →     R1 = 05H
```

If the value of working register R1 is 07H (00000111B), the statement "BITR R1.1" clears bit one of the destination register R1, leaving the value 05H (00000101B).

6.3.8 BITS-Bit Set

BITS dst.b

Operation: dst(b) ← 1

The BITS instruction sets the specified bit within the destination without affecting any other bits in the destination.

Flags: No flags are affected.

Format:

		Bytes	Cycles	Opcode (Hex)	Addr Mode dst
opc	dst | b | 1	2	4	77	rb

NOTE: In the second byte of the instruction format, the destination address is four bits, the bit address "b" is three bits, and the LSB address value is one bit in length.

Example: Given: R1 = 07H:

```
BITS    R1.3    →      R1 = 0FH
```

If working register R1 contains the value 07H (00000111B), the statement "BITS R1.3" sets bit three of the destination register R1 to "1", leaving the value 0FH (00001111B).

6.3.9 BOR-Bit OR

BOR dst, src.b

BOR dst.b,src

Operation: dst(0) ← dst(0) OR src(b)
or
dst(b) ← dst(b) OR src(0)

The specified bit of the source (or the destination) is logically ORed with bit zero (LSB) of the destination (or the source). The resulting bit value is stored in the specified bit of the destination. No other bits of the destination are affected. The source is unaffected.

Flags:

C: Unaffected.

Z: Set if the result is "0"; cleared otherwise.

S: Cleared to "0".

V: Undefined.

D: Unaffected.

H: Unaffected.

Format:

			Bytes	Cycles	Opcode (Hex)	Addr Mode dst	Addr Mode src
opc	dst | b | 0	src	3	6	07	r0	Rb
opc	src | b | 1	dst	3	6	07	Rb	r0

NOTE: In the second byte of the 3 byte instruction formats, the destination (or source) address is four bits, the bit address "b" is three bits, and the LSB address value is one bit.

Examples: Given: R1 = 07H and register 01H = 03H:

```
BOR     R1, 01H.1      →      R1 = 07H, register 01H = 03H
BOR     01H.2, R1      →      Register 01H = 07H, R1 = 07H
```

In the first example, destination working register R1 contains the value 07H (00000111B) and source register 01H the value 03H (00000011B). The statement "BOR R1, 01H.1" logically ORs bit one of register 01H (source) with bit zero of R1 (destination). This leaves the same value (07H) in working register R1.

In the second example, destination register 01H contains the value 03H (00000011B) and the source working register R1 the value 07H (00000111B). The statement "BOR 01H.2, R1" logically ORs bit two of register 01H (destination) with bit zero of R1 (source). This leaves the value 07H in register 01H.

6.3.10 BTJRF-Bit Test, Jump Relative on False

BTJRF dst, src.b

Operation: If src(b) is a "0", then PC ← PC + dst

The specified bit within the source operand is tested. If it is a "0", the relative address is added to the program counter and control passes to the statement whose address is now in the PC; otherwise, the instruction following the BTJRF instruction is executed.

Flags: No flags are affected.

Format:

(NOTE)			Bytes	Cycles	Opcode (Hex)	Addr Mode dst	Addr Mode src
opc	src | b | 0	dst	3	10	37	RA	rb

NOTE: In the second byte of the instruction format, the source address is four bits, the bit address "b" is three bits, and the LSB address value is one bit in length.

Example: Given: R1 = 07H:

```
BTJRF   SKIP, R1.3          →      PC jumps to SKIP location
```

If working register R1 contains the value 07H (00000111B), the statement "BTJRF SKIP, R1.3" tests bit 3. Because it is "0", the relative address is added to the PC and the PC jumps to the memory location pointed to by the SKIP. (Remember that the memory location must be within the allowed range of + 127 to – 128).

6.3.11 BTJRT-Bit Test, Jump Relative on True

BTJRT dst, src.b

Operation: If src (b) is a "1", then PC ← PC + dst

The specified bit within the source operand is tested. If it is a "1", the relative address is added to the program counter and control passes to the statement whose address is now in the PC; otherwise, the instruction following the BTJRT instruction is executed.

Flags: No flags are affected.

Format:

(NOTE)			Bytes	Cycles	Opcode (Hex)	Addr Mode dst	Addr Mode src
opc	src | b | 1	dst	3	10	37	RA	rb

NOTE: In the second byte of the instruction format, the source address is four bits, the bit address "b" is three bits, and the LSB address value is one bit in length.

Example: Given: R1 = 07H:

```
BTJRT   SKIP, R1.1
```

If working register R1 contains the value 07H (00000111B), the statement "BTJRT SKIP, R1.1" tests bit one in the source register (R1). Because it is a "1", the relative address is added to the PC and the PC jumps to the memory location pointed to by the SKIP. (Remember that the memory location must be within the allowed range of + 127 to – 128).

6.3.12 BXOR-Bit XOR

BXOR dst, src.b

BXOR dst.b, src

Operation: dst(0) ← dst(0) XOR src(b)
or
dst(b) ← dst(b) XOR src(0)

The specified bit of the source (or the destination) is logically exclusive-ORed with bit zero (LSB) of the destination (or source). The result bit is stored in the specified bit of the destination. No other bits of the destination are affected. The source is unaffected.

Flags:

C: Unaffected.

Z: Set if the result is "0"; cleared otherwise.

S: Cleared to "0".

V: Undefined.

D: Unaffected.

H: Unaffected.

Format:

			Bytes	Cycles	Opcode (Hex)	Addr Mode dst	Addr Mode src
opc	dst | b | 0	src	3	6	27	r0	Rb
opc	src | b | 1	dst	3	6	27	Rb	r0

NOTE: In the second byte of the 3 byte instruction formats, the destination (or source) address is four bits, the bit address "b" is three bits, and the LSB address value is one bit in length.

Examples: Given: R1 = 07H (00000111B) and register 01H = 03H (00000011B):

```
BXOR    R1, 01H.1      →      R1 = 06H, register 01H = 03H
BXOR    01H.2, R1      →      Register 01H = 07H, R1 = 07H
```

In the first example, destination working register R1 has the value 07H (00000111B) and source register 01H has the value 03H (00000011B). The statement "BXOR R1, 01H.1" exclusive-ORs bit one of register 01H (source) with bit zero of R1 (destination). The result bit value is stored in bit zero of R1, changing its value from 07H to 06H. The value of source register 01H is unaffected.

6.3.13 CALL-Call Procedure

CALL dst

Operation:

SP	←	SP – 1
@SP	←	PCL
SP	←	SP –1
@SP	←	PCH
PC	←	dst

The current contents of the program counter are pushed onto the top of the stack. The program counter value used is the address of the first instruction following the CALL instruction. The specified destination address is then loaded into the program counter and points to the first instruction of a procedure. At the end of the procedure the return instruction (RET) can be used to return to the original program flow. RET pops the top of the stack back into the program counter.

Flags: No flags are affected.

Format:

		Bytes	Cycles	Opcode (Hex)	Addr Mode dst
opc	dst	3	14	F6	DA
opc	dst	2	12	F4	IRR
opc	dst	2	14	D4	IA

Examples: Given: R0 = 35H, R1 = 21H, PC = 1A47H, and SP = 0002H:

```
CALL    3521H   →      SP = 0000H
        (Memory locations 0000H = 1AH, 0001H = 4AH, where
        4AH is the address that follows the instruction.)

CALL    @RR0    →      SP = 0000H (0000H = 1AH, 0001H = 49H)
CALL    #40H    →      SP = 0000H (0000H = 1AH, 0001H = 49H)
```

In the first example, if the program counter value is 1A47H and the stack pointer contains the value 0002H, the statement "CALL 3521H" pushes the current PC value onto the top of the stack. The stack pointer now points to memory location 0000H. The PC is then loaded with the value 3521H, the address of the first instruction in the program sequence to be executed.

If the contents of the program counter and stack pointer are the same as in the first example, the statement "CALL @RR0" produces the same result except that the 49H is stored in stack location 0001H (because the two-byte instruction format was used). The PC is then loaded with the value 3521H, the address of the first instruction in the program sequence to be executed. Assuming that the contents of the program counter and stack pointer are the same as in the first example, if program address 0040H contains 35H and program address 0041H contains 21H, the statement "CALL #40H" produces the same result as in the second example.

6.3.14 CCF-Complement Carry Flag

CCF

Operation: C ← NOT C

The carry flag (C) is complemented. If C = "1", the value of the carry flag is changed to logic zero; if C = "0", the value of the carry flag is changed to logic one.

Flags: **C:** Complemented.

No other flags are affected.

Format:

	Bytes	Cycles	Opcode (Hex)
opc	1	4	EF

Example: Given: The carry flag = "0":

```
CCF
```

If the carry flag = "0", the CCF instruction complements it in the FLAGS register (0D5H), changing its value from logic zero to logic one.

6.3.15 CLR-Clear

CLR dst

Operation: dst ← "0"

The destination location is cleared to "0".

Flags: No flags are affected.

Format:

	Bytes	Cycles	Opcode (Hex)	Addr Mode dst
opc | dst	2	4	B0	R
		4	B1	IR

Examples: Given: Register 00H = 4FH, register 01H = 02H, and register 02H = 5EH:

```
CLR     00H     →      Register 00H = 00H
CLR     @01H    →      Register 01H = 02H, register 02H = 00H
```

In Register (R) addressing mode, the statement "CLR 00H" clears the destination register 00H value to 00H. In the second example, the statement "CLR @01H" uses Indirect Register (IR) addressing mode to clear the 02H register value to 00H.

6.3.16 COM-Complement

COM dst

Operation: dst ← NOT dst

The contents of the destination location are complemented (one's complement); all "1s" are changed to "0s", and vice-versa.

Flags:

C: Unaffected.

Z: Set if the result is "0"; cleared otherwise.

S: Set if the result bit 7 is set; cleared otherwise.

V: Always reset to "0".

D: Unaffected.

H: Unaffected.

Format:

	Bytes	Cycles	Opcode (Hex)	Addr Mode dst
opc | dst	2	4	60	R
		4	61	IR

Examples: Given: R1 = 07H and register 07H = 0F1H:

```
COM     R1      →       R1 = 0F8H
COM     @R1     →       R1 = 07H, register 07H = 0EH
```

In the first example, destination working register R1 contains the value 07H (00000111B). The statement "COM R1" complements all the bits in R1: all logic ones are changed to logic zeros, and vice-versa, leaving the value 0F8H (11111000B).

In the second example, Indirect Register (IR) addressing mode is used to complement the value of destination register 07H (11110001B), leaving the new value 0EH (00001110B).

6.3.17 CP-Compare

CP dst, src

Operation: dst – src

The source operand is compared to (subtracted from) the destination operand, and the appropriate flags are set accordingly. The contents of both operands are unaffected by the comparison.

Flags:

C: Set if a "borrow" occurred (src > dst); cleared otherwise.

Z: Set if the result is "0"; cleared otherwise.

S: Set if the result is negative; cleared otherwise.

V: Set if arithmetic overflow occurred; cleared otherwise.

D: Unaffected.

H: Unaffected.

Format:

	Bytes	Cycles	Opcode (Hex)	Addr Mode dst	Addr Mode src
opc | dst | src	2	4	A2	r	r
		6	A3	r	Ir
opc | src | dst	3	6	A4	R	R
		6	A5	R	IR
opc | dst | src	3	6	A6	R	IM

Examples: 1. Given: R1 = 02H and R2 = 03H:

```
CP      R1, R2  →      Set the C and S flags
```

Destination working register R1 contains the value 02H and source register R2 contains the value 03H. The statement "CP R1, R2" subtracts the R2 value (source/subtrahend) from the R1 value (destination/minuend). Because a "borrow" occurs and the difference is negative, C and S are "1".

2. Given: R1 = 05H and R2 = 0AH:

```
CP      R1, R2
JP      UGE, SKIP
INC     R1
SKIP    LD R3, R1
```

In this example, destination working register R1 contains the value 05H which is less than the contents of the source working register R2 (0AH). The statement "CP R1, R2" generates C = "1" and the JP instruction does not jump to the SKIP location. After the statement "LD R3, R1" executes, the value 06H remains in working register R3.

6.3.18 CPIJE-Compare, Increment, and Jump on Equal

CPIJE dst, src, RA

Operation: If dst – src = "0", PC ← PC + RA
Ir ← Ir + 1

The source operand is compared to (subtracted from) the destination operand. If the result is "0", the relative address is added to the program counter and control passes to the statement whose address is now in the program counter. Otherwise, the instruction immediately following the CPIJE instruction is executed. In either case, the source pointer is incremented by one before the next instruction is executed.

Flags: No flags are affected.

Format:

				Bytes	Cycles	Opcode (Hex)	Addr Mode dst	Addr Mode src
opc	src	dst	RA	3	12	C2	r	Ir

NOTE: Execution time is 18 cycles if the jump is taken or 16 cycles if it is not taken.

Example: Given: R1 = 02H, R2 = 03H, and register 03H = 02H:

```
CPIJE  R1, @R2, SKIP  →      R2 = 04H, PC jumps to SKIP location
```

In this example, working register R1 contains the value 02H, working register R2 the value 03H, and register 03 contains 02H. The statement "CPIJE R1, @R2, SKIP" compares the @R2 value 02H (00000010B) to 02H (00000010B). Because the result of the comparison is equal, the relative address is added to the PC and the PC then jumps to the memory location pointed to by SKIP. The source register (R2) is incremented by one, leaving a value of 04H. (Remember that the memory location must be within the allowed range of + 127 to – 128.)

6.3.19 CPIJNE-Compare, Increment, and Jump on Non-Equal

CPIJNE dst, src, RA

Operation: If dst – src "0", PC ← PC + RA
Ir ← Ir + 1

The source operand is compared to (subtracted from) the destination operand. If the result is not "0", the relative address is added to the program counter and control passes to the statement whose address is now in the program counter; otherwise the instruction following the CPIJNE instruction is executed. In either case the source pointer is incremented by one before the next instruction.

Flags: No flags are affected.

Format:

				Bytes	Cycles	Opcode (Hex)	Addr Mode dst	Addr Mode src
opc	src	dst	RA	3	12	D2	r	Ir

NOTE: Execution time is 18 cycles if the jump is taken or 16 cycles if it is not taken.

Example: Given: R1 = 02H, R2 = 03H, and register 03H = 04H:

```
CPIJNE  R1, @R2, SKIP  →      R2 = 04H, PC jumps to SKIP location
```

Working register R1 contains the value 02H, working register R2 (the source pointer) the value 03H, and general register 03 the value 04H. The statement "CPIJNE R1, @R2, SKIP" subtracts 04H (00000100B) from 02H (00000010B). Because the result of the comparison is non-equal, the relative address is added to the PC and the PC then jumps to the memory location pointed to by SKIP. The source pointer register (R2) is also incremented by one, leaving a value of 04H. (Remember that the memory location must be within the allowed range of + 127 to – 128.)

6.3.20 DA-Decimal Adjust

DA dst

Operation: dst ← DA dst

The destination operand is adjusted to form two 4-bit BCD digits following an addition or subtraction operation. For addition (ADD, ADC) or subtraction (SUB, SBC), the following table indicates the operation performed. (The operation is undefined if the destination operand was not the result of a valid addition or subtraction of BCD digits):

Instruction	Carry Before DA	Bits 4–7 Value (Hex)	H Flag Before DA	Bits 0–3 Value (Hex)	Number Added to Byte	Carry After DA
	0	0–9	0	0–9	00	0
	0	0–8	0	A–F	06	0
	0	0–9	1	0–3	06	0
ADD	0	A–F	0	0–9	60	1
ADC	0	9–F	0	A–F	66	1
	0	A–F	1	0–3	66	1
	1	0–2	0	0–9	60	1
	1	0–2	0	A–F	66	1
	1	0–3	1	0–3	66	1
	0	0–9	0	0–9	00 = – 00	0
SUB	0	0–8	1	6–F	FA = – 06	0
SBC	1	7–F	0	0–9	A0 = – 60	1
	1	6–F	1	6–F	9A = – 66	1

Flags:

C: Set if there was a carry from the most significant bit; cleared otherwise (see table).

Z: Set if result is "0"; cleared otherwise.

S: Set if result bit 7 is set; cleared otherwise.

V: Undefined.

D: Unaffected.

H: Unaffected.

Format:

	Bytes	Cycles	Opcode (Hex)	Addr Mode dst
opc | dst	2	4	40	R
		4	41	IR

DA (Continued)

Example: Given: Working register R0 contains the value 15 (BCD), working register R1 contains 27 (BCD), and address 27H contains 46 (BCD):

```
ADD     R1, R0                  ; C ← "0", H ← "0", Bits 4-7 = 3, bits 0-3 = C, R1 ← 3CH
DA      R1                      ; R1 ← 3CH + 06
```

If addition is performed using the BCD values 15 and 27, the result should be 42. The sum is incorrect, however, when the binary representations are added in the destination location using standard binary arithmetic:

```
  0 0 0 1   0 1 0 1          15
+ 0 0 1 0   0 1 1 1          27
  0 0 1 1   1 1 0 0     =    3CH
```

The DA instruction adjusts this result so that the correct BCD representation is obtained:

```
  0 0 1 1   1 1 0 0
+ 0 0 0 0   0 1 1 0
  0 1 0 0   0 0 1 0     =    42
```

Assuming the same values given above, the statements

```
SUB     27H, R0                 ; C ← "0", H ← "0", Bits 4-7 = 3, bits 0-3 = 1
DA      @R1                     ; @R1 ← 31-0
```

Leave the value 31 (BCD) in address 27H (@R1).

6.3.21 DEC-Decrement

DEC dst

Operation: dst ← dst – 1

The contents of the destination operand are decremented by one.

Flags:

C: Unaffected.

Z: Set if the result is "0"; cleared otherwise.

S: Set if result is negative; cleared otherwise.

V: Set if arithmetic overflow occurred; cleared otherwise.

D: Unaffected.

H: Unaffected.

Format:

opc	dst

Bytes	Cycles	Opcode (Hex)	Addr Mode dst
2	4	00	R
	4	01	IR

Examples: Given: R1 = 03H and register 03H = 10H:

```
DEC     R1      →       R1 = 02H
DEC     @R1     →       Register 03H = 0FH
```

In the first example, if working register R1 contains the value 03H, the statement "DEC R1" decrements the hexadecimal value by one, leaving the value 02H. In the second example, the statement "DEC @R1" decrements the value 10H contained in the destination register 03H by one, leaving the value 0FH.

6.3.22 DECW-Decrement Word

DECW dst

Operation: dst ← dst – 1

The contents of the destination location (which must be an even address) and the operand following that location are treated as a single 16-bit value that is decremented by one.

Flags:

C: Unaffected.

Z: Set if the result is "0"; cleared otherwise.

S: Set if the result is negative; cleared otherwise.

V: Set if arithmetic overflow occurred; cleared otherwise.

D: Unaffected.

H: Unaffected.

Format:

opc	dst

Bytes	Cycles	Opcode (Hex)	Addr Mode dst
2	8	80	RR
	8	81	IR

Examples: Given: R0 = 12H, R1 = 34H, R2 = 30H, register 30H = 0FH, and register 31H = 21H:

```
DECW    RR0     →       R0 = 12H, R1 = 33H
DECW    @R2     →       Register 30H = 0FH, register 31H = 20H
```

In the first example, destination register R0 contains the value 12H and register R1 the value 34H. The statement "DECW RR0" addresses R0 and the following operand R1 as a 16-bit word and decrements the value of R1 by one, leaving the value 33H.

NOTE: A system malfunction may occur if you use a Zero flag (FLAGS.6) result together with a DECW instruction. To avoid this problem, we recommend that you use DECW as shown in the following example:

```
LOOP:   DECW    RR0
        LD      R2, R1
        OR      R2, R0
        JR      NZ, LOOP
```

6.3.23 DI-Disable Interrupts

DI

Operation: SYM (0) ← 0

Bit zero of the system mode control register, SYM.0, is cleared to "0", globally disabling all interrupt processing. Interrupt requests will continue to set their respective interrupt pending bits, but the CPU will not service them while interrupt processing is disabled.

Flags: No flags are affected.

Format:

	Bytes	Cycles	Opcode (Hex)
opc	1	4	8F

Example: Given: SYM = 01H:

```
DI
```

If the value of the SYM register is 01H, the statement "DI" leaves the new value 00H in the register and clears SYM.0 to "0", disabling interrupt processing.

Before changing IMR, interrupt pending and interrupt source control register, be sure DI state.

6.3.24 DIV-Divide (Unsigned)

DIV dst, src

Operation: dst ÷ src
dst (UPPER) ← REMAINDER
dst (LOWER) ← QUOTIENT

The destination operand (16 bits) is divided by the source operand (8 bits). The quotient (8 bits) is stored in the lower half of the destination. The remainder (8 bits) is stored in the upper half of the destination. When the quotient is $\geq 2^8$, the numbers stored in the upper and lower halves of the destination for quotient and remainder are incorrect. Both operands are treated as unsigned integers.

Flags:

C: Set if the V flag is set and quotient is between 2^8 and $2^9 - 1$; cleared otherwise.

Z: Set if divisor or quotient = "0"; cleared otherwise.

S: Set if MSB of quotient = "1"; cleared otherwise.

V: Set if quotient is $\geq 2^8$ or if divisor = "0"; cleared otherwise.

D: Unaffected.

H: Unaffected.

Format:

	Bytes	Cycles	Opcode (Hex)	Addr Mode dst	Addr Mode src
opc | src | dst	3	26/10	94	RR	R
		26/10	95	RR	IR
		26/10	96	RR	IM

NOTE: Execution takes 10 cycles if the divide-by-zero is attempted; otherwise it takes 26 cycles.

Examples: Given: R0 = 10H, R1 = 03H, R2 = 40H, register 40H = 80H:

```
DIV     RR0, R2        →      R0 = 03H, R1 = 40H
DIV     RR0, @R2       →      R0 = 03H, R1 = 20H
DIV     RR0, #20H      →      R0 = 03H, R1 = 80H
```

In the first example, destination working register pair RR0 contains the values 10H (R0) and 03H (R1), and register R2 contains the value 40H. The statement "DIV RR0, R2" divides the 16-bit RR0 value by the 8-bit value of the R2 (source) register. After the DIV instruction, R0 contains the value 03H and R1 contains 40H. The 8-bit remainder is stored in the upper half of the destination register RR0 (R0) and the quotient in the lower half (R1).

6.3.25 DJNZ-Decrement and Jump if Non-Zero

DJNZ r, dst

Operation: $r \leftarrow r - 1$
If $r \neq 0$, $PC \leftarrow PC + dst$

The working register being used as a counter is decremented. If the contents of the register are not logic zero after decrementing, the relative address is added to the program counter and control passes to the statement whose address is now in the PC. The range of the relative address is +127 to – 128, and the original value of the PC is taken to be the address of the instruction byte following the DJNZ statement.

NOTE: In case of using DJNZ instruction, the working register being used as a counter should be set at the one of location 0C0H to 0CFH with SRP, SRP0, or SRP1 instruction.

Flags: No flags are affected.

Format:

	Bytes	Cycles	Opcode (Hex)	Addr Mode dst
r | opc | dst	2	8 (jump taken)	rA	RA
		8 (no jump)	r = 0 to F	

Example: Given: R1 = 02H and LOOP is the label of a relative address:

```
SRP     #0C0H
DJNZ    R1, LOOP
```

DJNZ is typically used to control a "loop" of instructions. In many cases, a label is used as the destination operand instead of a numeric relative address value. In the example, working register R1 contains the value 02H, and LOOP is the label for a relative address.

The statement "DJNZ R1, LOOP" decrements register R1 by one, leaving the value 01H. Because the contents of R1 after the decrement are non-zero, the jump is taken to the relative address specified by the LOOP label.

6.3.26 EI-Enable Interrupts

EI

Operation: SYM (0) ← 1

An EI instruction sets bit zero of the system mode register, SYM.0 to "1". This allows interrupts to be serviced as they occur (assuming they have highest priority). If an interrupt's pending bit was set while interrupt processing was disabled (by executing a DI instruction), it will be serviced when you execute the EI instruction.

Flags: No flags are affected.

Format:

	Bytes	Cycles	Opcode (Hex)
opc	1	4	9F

Example: Given: SYM = 00H:

```
EI
```

If the SYM register contains the value 00H, that is, if interrupts are currently disabled, the statement "EI" sets the SYM register to 01H, enabling all interrupts. (SYM.0 is the enable bit for global interrupt processing.)

6.3.27 ENTER-Enter

ENTER

Operation:

SP	←	SP – 2
@SP	←	IP
IP	←	PC
PC	←	@IP
IP	←	IP + 2

This instruction is useful when implementing threaded-code languages. The contents of the instruction pointer are pushed to the stack. The program counter (PC) value is then written to the instruction pointer. The program memory word that is pointed to by the instruction pointer is loaded into the PC, and the instruction pointer is incremented by two.

Flags: No flags are affected.

Format:

	Bytes	Cycles	Opcode (Hex)
opc	1	14	1F

Example: The diagram below shows one example of how to use an ENTER statement.

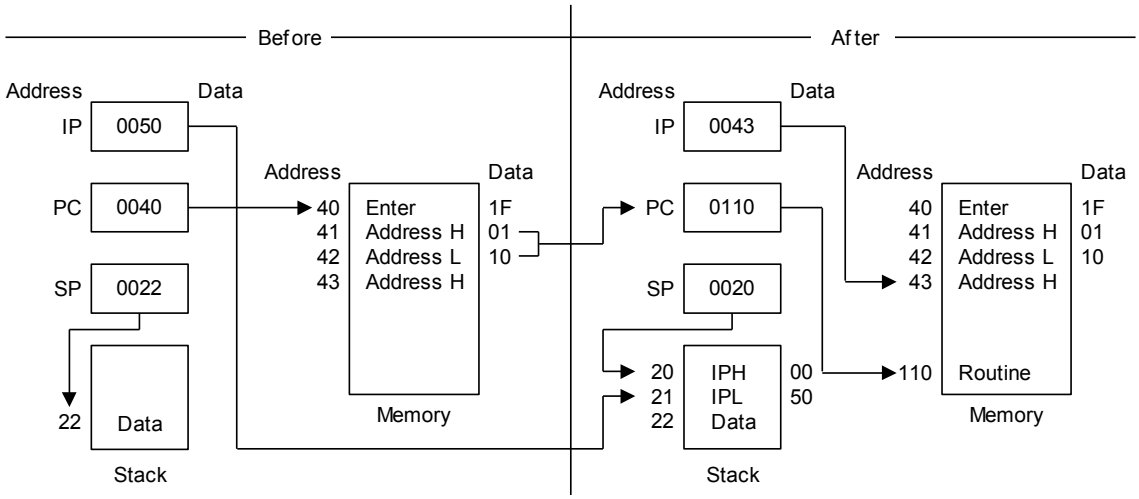

6.3.28 EXIT-Exit

EXIT

Operation:

IP	←	@SP
SP	←	SP + 2
PC	←	@IP
IP	←	IP + 2

This instruction is useful when implementing threaded-code languages. The stack value is popped and loaded into the instruction pointer. The program memory word that is pointed to by the instruction pointer is then loaded into the program counter, and the instruction pointer is incremented by two.

Flags: No flags are affected.

Format:

	Bytes	Cycles	Opcode (Hex)
opc	1	14 (internal stack)	2F
		16 (internal stack)	

Example: The diagram below shows one example of how to use an EXIT statement.

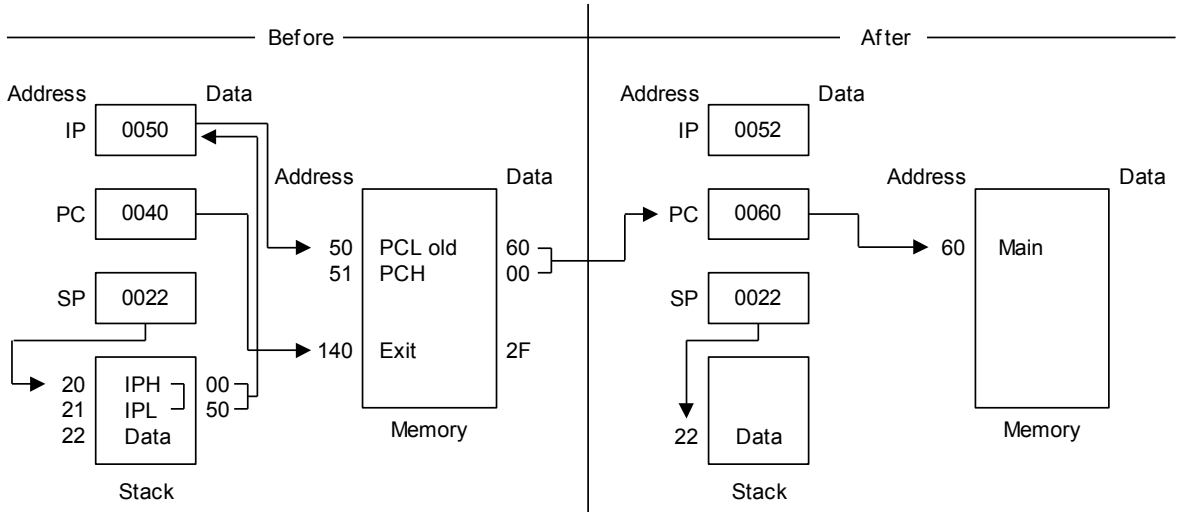

6.3.29 IDLE-Idle Operation

IDLE

Operation:

The IDLE instruction stops the CPU clock while allowing system clock oscillation to continue. Idle mode can be released by an interrupt request (IRQ) or an external reset operation.

Flags: No flags are affected.

Format:

	Bytes	Cycles	Opcode (Hex)	Addr Mode dst	Addr Mode src
opc	1	4	6F	–	–

Example: The instruction

```
IDLE
```

Stops the CPU clock but not the system clock.

6.3.30 INC-Increment

INC dst

Operation: dst ← dst + 1

The contents of the destination operand are incremented by one.

Flags:

C: Unaffected.

Z: Set if the result is "0"; cleared otherwise.

S: Set if the result is negative; cleared otherwise.

V: Set if arithmetic overflow occurred; cleared otherwise.

D: Unaffected.

H: Unaffected.

Format:

	Bytes	Cycles	Opcode (Hex)	Addr Mode dst
dst | opc	1	4	rE r = 0 to F	r
opc | dst	2	4	20	R
		4	21	IR

Examples: Given: R0 = 1BH, register 00H = 0CH, and register 1BH = 0FH:

```
INC     R0          →     R0 = 1CH
INC     00H         →     Register 00H = 0DH
INC     @R0         →     R0 = 1BH, register 01H = 10H
```

In the first example, if destination working register R0 contains the value 1BH, the statement "INC R0" leaves the value 1CH in that same register.

The next example shows the effect an INC instruction has on register 00H, assuming that it contains the value 0CH.

In the third example, INC is used in Indirect Register (IR) addressing mode to increment the value of register 1BH from 0FH to 10H.

6.3.31 INCW-Increment Word

INCW dst

Operation: dst ← dst + 1

The contents of the destination (which must be an even address) and the byte following that location are treated as a single 16-bit value that is incremented by one.

Flags:

C: Unaffected.

Z: Set if the result is "0"; cleared otherwise.

S: Set if the result is negative; cleared otherwise.

V: Set if arithmetic overflow occurred; cleared otherwise.

D: Unaffected.

H: Unaffected.

Format:

opc	dst

Bytes	Cycles	Opcode (Hex)	Addr Mode dst
2	8	A0	RR
	8	A1	IR

Examples: Given: R0 = 1AH, R1 = 02H, register 02H = 0FH, and register 03H = 0FFH:

```
INCW    RR0     →      R0 = 1AH, R1 = 03H
INCW    @R1     →      Register 02H = 10H, register 03H = 00H
```

In the first example, the working register pair RR0 contains the value 1AH in register R0 and 02H in register R1. The statement "INCW RR0" increments the 16-bit destination by one, leaving the value 03H in register R1. In the second example, the statement "INCW @R1" uses Indirect Register (IR) addressing mode to increment the contents of general register 03H from 0FFH to 00H and register 02H from 0FH to 10H.

NOTE: A system malfunction may occur if you use a Zero (Z) flag (FLAGS.6) result together with an INCW instruction. To avoid this problem, we recommend that you use INCW as shown in the following example:

```
LOOP:   INCW    RR0
        LD      R2, R1
        OR      R2, R0
        JR      NZ, LOOP
```

6.3.32 IRET-Interrupt Return

IRET IRET (Normal) IRET (Fast)

Operation:

IRET (Normal)	IRET (Fast)
FLAGS ← @SP	PC ↔ IP
SP ← SP + 1	FLAGS ← FLAGS'
PC ← @SP	FIS ← 0
SP ← SP + 2	
SYM(0) ← 1	

This instruction is used at the end of an interrupt service routine. It restores the flag register and the program counter. It also re-enables global interrupts. A "normal IRET" is executed only if the fast interrupt status bit (FIS, bit one of the FLAGS register, 0D5H) is cleared (= "0"). If a fast interrupt occurred, IRET clears the FIS bit that was set at the beginning of the service routine.

Flags: All flags are restored to their original settings (that is, the settings before the interrupt occurred).

Format:

IRET (Normal)	Bytes	Cycles	Opcode (Hex)
opc	1	10 (internal stack) 12 (internal stack)	BF

IRET (Fast)	Bytes	Cycles	Opcode (Hex)
opc	1	6	BF

Example: In the figure below, the instruction pointer is initially loaded with 100H in the main program before interrupts are enabled. When an interrupt occurs, the program counter and instruction pointer are swapped. This causes the PC to jump to address 100H and the IP to keep the return address. The last instruction in the service routine normally is a jump to IRET at address FFH. This causes the instruction pointer to be loaded with 100H "again" and the program counter to jump back to the main program. Now, the next interrupt can occur and the IP is still correct at 100H.

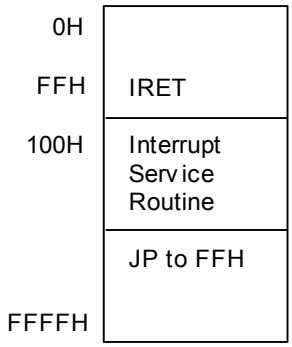

NOTE: In the fast interrupt example above, if the last instruction is not a jump to IRET, you must pay attention to the order of the last two instructions. The IRET cannot be immediately proceeded by a clearing of the interrupt status (as with a reset of the IPR register).

6.3.33 JP-Jump

JP cc,dst (Conditional)

JP dst (Unconditional)

Operation: If cc is true, PC ← dst

The conditional JUMP instruction transfers program control to the destination address if the condition specified by the condition code (cc) is true; otherwise, the instruction following the JP instruction is executed. The unconditional JP simply replaces the contents of the PC with the contents of the specified register pair. Control then passes to the statement addressed by the PC.

Flags: No flags are affected.

Format: (1)

(2)		Bytes	Cycles	Opcode (Hex)	Addr Mode dst
cc | opc	dst	3	8	ccD cc = 0 to F	DA
opc	dst	2	8	30	IRR

NOTE:

1. The 3 byte format is used for a conditional jump and the 2 byte format for an unconditional jump.
2. In the first byte of the three-byte instruction format (conditional jump), the condition code and the opcode are both four bits.

Examples: Given: The carry flag (C) = "1", register 00 = 01H, and register 01 = 20H:

```
JP      C, LABEL_W      →      LABEL_W = 1000H, PC = 1000H
JP      @00H            →      PC = 0120H
```

The first example shows a conditional JP. Assuming that the carry flag is set to "1", the statement "JP C, LABEL_W" replaces the contents of the PC with the value 1000H and transfers control to that location. Had the carry flag not been set, control would then have passed to the statement immediately following the JP instruction.

The second example shows an unconditional JP. The statement "JP @00" replaces the contents of the PC with the contents of the register pair 00H and 01H, leaving the value 0120H.

6.3.34 JR-Jump Relative

JR cc, dst

Operation: If cc is true, PC ← PC + dst

If the condition specified by the condition code (cc) is true, the relative address is added to the program counter and control passes to the statement whose address is now in the program counter; otherwise, the instruction following the JR instruction is executed.; (see list of condition codes).

The range of the relative address is +127, –128, and the original value of the program counter is taken to be the address of the first instruction byte following the JR statement.

Flags: No flags are affected.

Format:

(NOTE)	Bytes	Cycles	Opcode (Hex)	Addr Mode dst
cc | opc | dst	2	6	ccB	RA
			cc = 0 to F	

NOTE: In the first byte of the two-byte instruction format, the condition code and the opcode are each four bits.

Example: Given: The carry flag = "1" and LABEL_X = 1FF7H:

```
JR      C, LABEL_X      →       PC = 1FF7H
```

If the carry flag is set (that is, if the condition code is true), the statement "JR C, LABEL_X" will pass control to the statement whose address is now in the PC. Otherwise, the program instruction following the JR would be executed.

6.3.35 LD-Load

LD dst, src

Operation: dst ← src

The contents of the source are loaded into the destination. The source's contents are unaffected.

Flags: No flags are affected.

Format:

			Bytes	Cycles	Opcode (Hex)	Addr Mode dst	Addr Mode src
dst | opc	src		2	4	rC	r	IM
				4	r8	r	R
src | opc	dst		2	4	r9 r = 0 to F	R	r
opc	dst | src		2	4	C7	r	Ir
				4	D7	Ir	r
opc	src	dst	3	6	E4	R	R
				6	E5	R	IR
opc	dst	src	3	6	E6	R	IM
				6	D6	IR	IM
opc	src	dst	3	6	F5	IR	R
opc	dst | src	x	3	6	87	r	x [r]
opc	src | dst	x	3	6	97	x [r]	r

LD (Continued)

Examples: Given: R0 = 01H, R1 = 0AH, register 00H = 01H, register 01H = 20H, register 02H = 02H, LOOP = 30H, and register 3AH = 0FFH:

```
LD      R0, #10H        →      R0 = 10H
LD      R0, 01H         →      R0 = 20H, register 01H = 20H
LD      01H, R0         →      Register 01H = 01H, R0 = 01H
LD      R1, @R0         →      R1 = 20H, R0 = 01H
LD      @R0, R1         →      R0 = 01H, R1 = 0AH, register 01H = 0AH
LD      00H, 01H        →      Register 00H = 20H, register 01H = 20H
LD      02H, @00H       →      Register 02H = 20H, register 00H = 01H
LD      00H, #0AH       →      Register 00H = 0AH
LD      @00H, #10H      →      Register 00H = 01H, register 01H = 10H
LD      @00H, 02H       →      Register 00H = 01H, register 01H = 02, register 02H = 02H
LD      R0, #LOOP[R1]   →      R0 = 0FFH, R1 = 0AH
LD      #LOOP[R0], R1   →      Register 31H = 0AH, R0 = 01H, R1 = 0AH
```

6.3.36 LDB-Load Bit

LDB dst, src.b

LDB dst.b,src

Operation: dst(0) ← src(b)
or
dst(b) ← src(0)

The specified bit of the source is loaded into bit zero (LSB) of the destination, or bit zero of the source is loaded into the specified bit of the destination. No other bits of the destination are affected. The source is unaffected.

Flags: No flags are affected.

Format:

			Bytes	Cycles	Opcode (Hex)	Addr Mode dst	Addr Mode src
opc	dst | b | 0	src	3	6	47	r0	Rb
opc	src | b | 1	dst	3	6	47	Rb	r0

NOTE: In the second byte of the instruction formats, the destination (or source) address is four bits, the bit address "b" is three bits, and the LSB address value is one bit in length.

Examples: Given: R0 = 06H and general register 00H = 05H:

```
LDB     R0, 00H.2      →      R0 = 07H, register 00H = 05H
LDB     00H.0, R0      →      R0 = 06H, register 00H = 04H
```

In the first example, destination working register R0 contains the value 06H and the source general register 00H the value 05H. The statement "LD R0,00H.2" loads the bit two value of the 00H register into bit zero of the R0 register, leaving the value 07H in register R0.

In the second example, 00H is the destination register. The statement "LD 00H.0, R0" loads bit zero of register R0 to the specified bit (bit zero) of the destination register, leaving 04H in general register 00H.

6.3.37 LDC/LDE-Load Memory

LDC/LDE dst, src

Operation: dst ← src

This instruction loads a byte from program or data memory into a working register or vice-versa. The source values are unaffected. LDC refers to program memory and LDE to data memory. The assembler makes "Irr" or "rr" values an even number for program memory and odd an odd number for data memory.

Flags: No flags are affected.

Format:

					Bytes	Cycles	Opcode (Hex)	Addr Mode dst	Addr Mode src
1.	opc	dst | src			2	10	C3	r	Irr
2.	opc	src | dst			2	10	D3	Irr	r
3.	opc	dst | src	XS		3	12	E7	r	XS [rr]
4.	opc	src | dst	XS		3	12	F7	XS [rr]	r
5.	opc	dst | src	XL_L	XL_H	4	14	A7	r	XL [rr]
6.	opc	src | dst	XL_L	XL_H	4	14	B7	XL [rr]	r
7.	opc	dst | 0000	DA_L	DA_H	4	14	A7	r	DA
8.	opc	src | 0000	DA_L	DA_H	4	14	B7	DA	r
9.	opc	dst | 0001	DA_L	DA_H	4	14	A7	r	DA
10.	opc	src | 0001	DA_L	DA_H	4	14	B7	DA	r

NOTE:

1. The source (src) or working register pair [rr] for formats 5 and 6 cannot use register pair 0–1.
2. For formats 3 and 4, the destination address "XS [rr]" and the source address "XS [rr]" are each one byte.
3. For formats 5 and 6, the destination address "XL [rr]" and the source address "XL [rr]" are each two bytes.
4. The DA and r source values for formats 7 and 8 are used to address program memory; the second set of values, used in formats 9 and 10, are used to address data memory.

LDC/LDE (Continued)

Examples: Given: R0 = 11H, R1 = 34H, R2 = 01H, R3 = 04H; Program memory locations 0103H = 4FH, 0104H = 1A, 0105H = 6DH, and 1104H = 88H. External data memory locations 0103H = 5FH, 0104H = 2AH, 0105H = 7DH, and 1104H = 98H:

```
LDC     R0, @RR2              ; R0 ← contents of program memory location 0104H
                              ; R0 = 1AH, R2 = 01H, R3 = 04H
LDE     R0, @RR2              ; R0 ← contents of external data memory location 0104H
                              ; R0 =  2AH, R2 = 01H, R3 = 04H
LDC (NOTE)@RR2, R0            ; 11H (contents of R0) is loaded into program memory
                              ; location 0104H (RR2),
                              ; working registers R0, R2, R3 → no change
LDE     @RR2, R0              ; 11H (contents of R0) is loaded into external data memory
                              ; location 0104H (RR2),
                              ; working registers R0, R2, R3 → no change
LDC     R0, #01H[RR2]         ; R0 ← contents of program memory location 0105H
                              ; (01H + RR2),
                              ; R0 = 6DH, R2 = 01H, R3 = 04H
LDE     R0, #01H[RR2]         ; R0 ← contents of external data memory location 0105H
                              ; (01H + RR2), R0 = 7DH, R2 = 01H, R3 = 04H
LDC (NOTE)#01H[RR2], R0       ; 11H (contents of R0) is loaded into program memory
                                location
                              ; 0105H (01H + 0104H)
LDE     #01H[RR2], R0         ; 11H (contents of R0) is loaded into external data memory
                              ; location 0105H (01H + 0104H)
LDC     R0, #1000H[RR2]       ; R0 ← contents of program memory location 1104H
                              ; (1000H + 0104H), R0  = 88H, R2 = 01H, R3 = 04H
LDE     R0, #1000H[RR2]       ; R0 ← contents of external data memory location 1104H
                              ; (1000H + 0104H), R0 = 98H, R2 = 01H, R3 = 04H
LDC     R0, 1104H             ; R0 ← contents of program memory location 1104H, R0 = 88H
LDE     R0, 1104H             ; R0 ← contents of external data memory location 1104H,
                              ; R0 = 98H
LDC (NOTE)1105H, R0           ; 11H (contents of R0) is loaded into program memory
                                location
                              ; 1105H, (1105H) ← 11H
LDE     1105H, R0             ; 11H (contents of R0) is loaded into external data memory
                              ; location 1105H, (1105H) ← 11H
```

NOTE: These instructions are not supported by masked ROM type devices.

6.3.38 LDCD/LDED-Load Memory and Decrement

LDCD/LDED dst, src

Operation: dst ← src
rr ← rr – 1

These instructions are used for user stacks or block transfers of data from program or data memory to the register file. The address of the memory location is specified by a working register pair. The contents of the source location are loaded into the destination location. The memory address is then decremented. The contents of the source are unaffected.

LDCD references program memory and LDED references external data memory. The assembler makes "Irr" an even number for program memory and an odd number for data memory.

Flags: No flags are affected.

Format:

		Bytes	Cycles	Opcode (Hex)	Addr Mode dst	Addr Mode src
opc	dst | src	2	10	E2	r	Irr

Examples: Given: R6 = 10H, R7 = 33H, R8 = 12H, program memory location 1033H = 0CDH, and external data memory location 1033H = 0DDH:

```
LDCD    R8, @RR6        ; 0CDH (contents of program memory location 1033H) is loaded
                        ; into R8 and RR6 is decremented by one
                        ; R8 = 0CDH, R6 = 10H, R7 = 32H (RR6 ← RR6 - 1)

LDED    R8, @RR6        ; 0DDH (contents of data memory location 1033H) is loaded
                        ; into R8 and RR6 is decremented by one (RR6 ← RR6 - 1)
                        ; R8 = 0DDH, R6 = 10H, R7 = 32H
```

6.3.39 LDCI/LDEI-Load Memory and Increment

LDCI/LDEI dst, src

Operation: dst ← src
rr ← rr + 1

These instructions are used for user stacks or block transfers of data from program or data memory to the register file. The address of the memory location is specified by a working register pair. The contents of the source location are loaded into the destination location. The memory address is then incremented automatically. The contents of the source are unaffected.

LDCI refers to program memory and LDEI refers to external data memory. The assembler makes "Irr" even for program memory and odd for data memory.

Flags: No flags are affected.

Format:

		Bytes	Cycles	Opcode (Hex)	Addr Mode dst	Addr Mode src
opc	dst | src	2	10	E3	r	Irr

Examples: Given: R6 = 10H, R7 = 33H, R8 = 12H, program memory locations 1033H = 0CDH and 1034H = 0C5H; external data memory locations 1033H = 0DDH and 1034H = 0D5H:

```
LDCI    R8, @RR6        ; 0CDH (contents of program memory location 1033H) is loaded
                        ; into R8 and RR6 is incremented by one (RR6 ← RR6 + 1)
                        ; R8 = 0CDH, R6 = 10H, R7 = 34H

LDEI    R8, @RR6        ; 0DDH (contents of data memory location 1033H) is loaded
                        ; into R8 and RR6 is incremented by one (RR6 ← RR6 + 1)
                        ; R8 = 0DDH, R6 = 10H, R7 = 34H
```

6.3.40 LDCPD/LDEPD-Load Memory with Pre-Decrement

LDCPD/ LDEPD dst, src

Operation: rr ← rr – 1
dst ← src

These instructions are used for block transfers of data from program or data memory from the register file. The address of the memory location is specified by a working register pair and is first decremented. The contents of the source location are then loaded into the destination location. The contents of the source are unaffected.

LDCPD refers to program memory and LDEPD refers to external data memory. The assembler makes "Irr" an even number for program memory and an odd number for external data memory.

Flags: No flags are affected.

Format:

		Bytes	Cycles	Opcode (Hex)	Addr Mode dst	Addr Mode src
opc	src | dst	2	14	F2	Irr	r

Examples: Given: R0 = 77H, R6 = 30H, and R7 = 00H:

```
LDCPD   @RR6, R0        ; (RR6  ←  RR6 - 1)
                        ; 77H (contents of R0) is loaded into program memory location
                        ; 2FFFH (3000H - 1H)
                        ; R0 = 77H, R6 = 2FH, R7 = 0FFH

LDEPD   @RR6, R0        ; (RR6 ← RR6 - 1)
                        ; 77H (contents of R0) is loaded into external data memory
                        ; location 2FFFH (3000H - 1H)
                        ; R0 = 77H, R6 = 2FH, R7 = 0FFH
```

6.3.41 LDCPI/LDEPI-Load Memory with Pre-Increment

LDCPI/ LDEPI dst, src

Operation: rr ← rr + 1
dst ← src

These instructions are used for block transfers of data from program or data memory from the register file. The address of the memory location is specified by a working register pair and is first incremented. The contents of the source location are loaded into the destination location. The contents of the source are unaffected.

LDCPI refers to program memory and LDEPI refers to external data memory. The assembler makes "Irr" an even number for program memory and an odd number for data memory.

Flags: No flags are affected.

Format:

		Bytes	Cycles	Opcode (Hex)	Addr Mode dst	Addr Mode src
opc	src | dst	2	14	F3	Irr	r

Examples: Given: R0 = 7FH, R6 = 21H, and R7 = 0FFH:

```
LDCPI   @RR6, R0        ; (RR6 ← RR6 + 1)
                        ; 7FH (contents of R0) is loaded into program memory
                        ; location 2200H (21FFH + 1H)
                        ; R0 = 7FH, R6 = 22H, R7 = 00H

LDEPI   @RR6, R0        ; (RR6 ← RR6 + 1)
                        ; 7FH (contents of R0) is loaded into external data memory
                        ; location 2200H (21FFH + 1H)
                        ; R0 = 7FH, R6 = 22H, R7 = 00H
```

6.3.42 LDW-Load Word

LDW dst, src

Operation: dst ← src

The contents of the source (a word) are loaded into the destination. The contents of the source are unaffected.

Flags: No flags are affected.

Format:

	Bytes	Cycles	Opcode (Hex)	Addr Mode dst	Addr Mode src
opc | src | dst	3	8	C4	RR	RR
		8	C5	RR	IR
opc | dst | src	4	8	C6	RR	IML

Examples: Given: R4 = 06H, R5 = 1CH, R6 = 05H, R7 = 02H, register 00H = 1AH, register 01H = 02H, register 02H = 03H, and register 03H = 0FH:

```
LDW     RR6, RR4        →      R6 = 06H, R7 = 1CH, R4 = 06H, R5 = 1CH
LDW     00H, 02H        →      Register 00H = 03H, register 01H = 0FH,
                               register 02H = 03H, register 03H = 0FH
LDW     RR2, @R7        →      R2 = 03H, R3 = 0FH,
LDW     04H, @01H       →      Register 04H = 03H, register 05H = 0FH
LDW     RR6, #1234H     →      R6 = 12H, R7 = 34H
LDW     02H, #0FEDH     →      Register 02H = 0FH, register 03H = 0EDH
```

In the second example, please note that the statement "LDW 00H,02H" loads the contents of the source word 02H, 03H into the destination word 00H, 01H. This leaves the value 03H in general register 00H and the value 0FH in register 01H.

The other examples show how to use the LDW instruction with various addressing modes and formats.

6.3.43 MULT-Multiply (Unsigned)

MULT dst, src

Operation: dst ← dst × src

The 8-bit destination operand (even register of the register pair) is multiplied by the source operand (8 bits) and the product (16 bits) is stored in the register pair specified by the destination address. Both operands are treated as unsigned integers.

Flags:

C: Set if result is > 255; cleared otherwise.

Z: Set if the result is "0"; cleared otherwise.

S: Set if MSB of the result is a "1"; cleared otherwise.

V: Cleared.

D: Unaffected.

H: Unaffected.

Format:

opc	src	dst

Bytes	Cycles	Opcode (Hex)	Addr Mode dst	Addr Mode src
3	22	84	RR	R
	22	85	RR	IR
	22	86	RR	IM

Examples: Given: Register 00H = 20H, register 01H = 03H, register 02H = 09H, register 03H = 06H:

```
MULT    00H, 02H      →     Register 00H = 01H, register 01H = 20H, register 02H = 09H
MULT    00H, @01H     →     Register 00H = 00H, register 01H = 0C0H
MULT    00H, #30H     →     Register 00H = 06H, register 01H = 00H
```

In the first example, the statement "MULT 00H, 02H" multiplies the 8-bit destination operand (in the register 00H of the register pair 00H, 01H) by the source register 02H operand (09H). The 16-bit product, 0120H, is stored in the register pair 00H, 01H.

6.3.44 NEXT-Next

NEXT

Operation: PC ← @ IP
IP ← IP + 2

The NEXT instruction is useful when implementing threaded-code languages. The program memory word that is pointed to by the instruction pointer is loaded into the program counter. The instruction pointer is then incremented by two.

Flags: No flags are affected.

Format:

	Bytes	Cycles	Opcode (Hex)
opc	1	10	0F

Example: The following diagram shows one example of how to use the NEXT instruction.

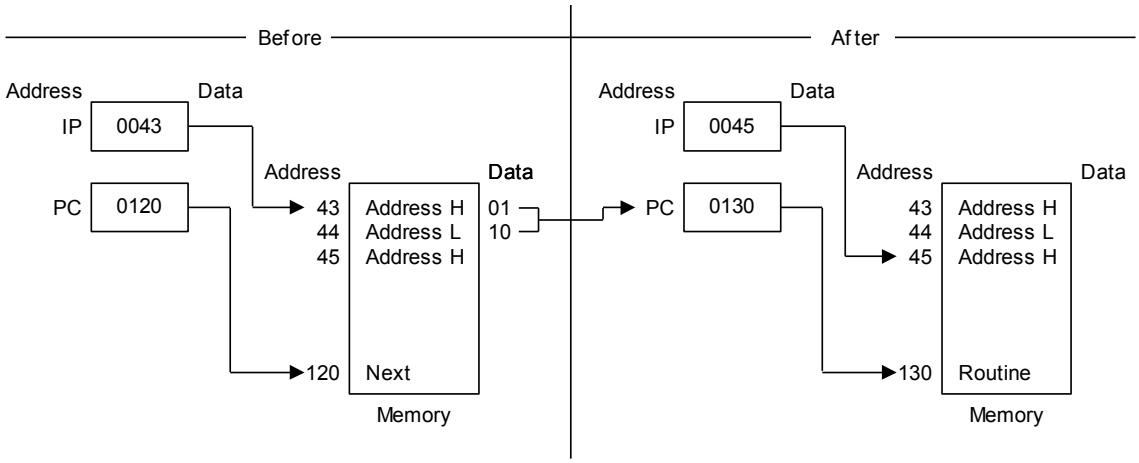

6.3.45 NOP-No Operation

NOP

Operation: No action is performed when the CPU executes this instruction. Typically, one or more NOPs are executed in sequence in order to effect a timing delay of variable duration.

Flags: No flags are affected.

Format:

	Bytes	Cycles	Opcode (Hex)
opc	1	4	FF

Example: When the instruction

```
NOP
```

Is encountered in a program, no operation occurs. Instead, there is a delay in instruction execution time.

6.3.46 OR-Logical OR

OR dst, src

Operation: dst ← dst OR src

The source operand is logically ORed with the destination operand and the result is stored in the destination. The contents of the source are unaffected. The OR operation results in a "1" being stored whenever either of the corresponding bits in the two operands is a "1"; otherwise a "0" is stored.

Flags:

C: Unaffected.

Z: Set if the result is "0"; cleared otherwise.

S: Set if the result bit 7 is set; cleared otherwise.

V: Always cleared to "0".

D: Unaffected.

H: Unaffected.

Format:

	Bytes	Cycles	Opcode (Hex)	Addr Mode dst	Addr Mode src
opc | dst | src	2	4	42	r	r
		6	43	r	Ir
opc | src | dst	3	6	44	R	R
		6	45	R	IR
opc | dst | src	3	6	46	R	IM

Examples: Given: R0 = 15H, R1 = 2AH, R2 = 01H, register 00H = 08H, register 01H = 37H, and register 08H = 8AH:

```
OR      R0, R1          →      R0 = 3FH, R1 = 2AH
OR      R0, @R2         →      R0 = 37H, R2 = 01H, register 01H = 37H
OR      00H, 01H        →      Register 00H = 3FH, register 01H = 37H
OR      01H, @00H       →      Register 00H = 08H, register 01H = 0BFH
OR      00H, #02H       →      Register 00H = 0AH
```

In the first example, if working register R0 contains the value 15H and register R1 the value 2AH, the statement "OR R0,R1" logical-ORs the R0 and R1 register contents and stores the result (3FH) in destination register R0.

The other examples show the use of the logical OR instruction with the various addressing modes and formats.

6.3.47 POP-Pop from Stack

POP dst

Operation: dst ← @SP
SP ← SP + 1

The contents of the location addressed by the stack pointer are loaded into the destination. The stack pointer is then incremented by one.

Flags: No flags affected.

Format:

	Bytes	Cycles	Opcode (Hex)	Addr Mode dst
opc | dst	2	8	50	R
		8	51	IR

Examples: Given: Register 00H = 01H, register 01H = 1BH, SPH (0D8H) = 00H, SPL (0D9H) = 0FBH, and stack register 0FBH = 55H:

```
POP     00H     →      Register 00H = 55H, SP = 00FCH
POP     @00H    →      Register 00H = 01H, register 01H = 55H, SP = 00FCH
```

In the first example, general register 00H contains the value 01H. The statement "POP 00H" loads the contents of location 00FBH (55H) into destination register 00H and then increments the stack pointer by one. Register 00H then contains the value 55H and the SP points to location 00FCH.

6.3.48 POPUD-Pop User Stack (Decrementing)

POPUD dst, src

Operation: dst ← src
IR ← IR – 1

This instruction is used for user-defined stacks in the register file. The contents of the register file location addressed by the user stack pointer are loaded into the destination. The user stack pointer is then decremented.

Flags: No flags are affected.

Format:

			Bytes	Cycles	Opcode (Hex)	Addr Mode dst	Addr Mode src
opc	src	dst	3	8	92	R	IR

Example: Given: Register 00H = 42H (user stack pointer register), register 42H = 6FH, and register 02H = 70H:

```
POPUD   02H, @00H       →     Register 00H = 41H, register 02H = 6FH, register 42H = 6FH
```

If general register 00H contains the value 42H and register 42H the value 6FH, the statement "POPUD 02H, @ 00H" loads the contents of register 42H into the destination register 02H. The user stack pointer is then decremented by one, leaving the value 41H.

6.3.49 POPUI-Pop User Stack (Incrementing)

POPUI dst, src

Operation: dst ← src
IR ← IR + 1

The POPUI instruction is used for user-defined stacks in the register file. The contents of the register file location addressed by the user stack pointer are loaded into the destination. The user stack pointer is then incremented.

Flags: No flags are affected.

Format:

			Bytes	Cycles	Opcode (Hex)	Addr Mode dst	Addr Mode src
opc	src	dst	3	8	93	R	IR

Example: Given: Register 00H = 01H and register 01H = 70H:

```
POPUI   02H, @00H       →     Register 00H = 02H, register 01H = 70H, register 02H = 70H
```

If general register 00H contains the value 01H and register 01H the value 70H, the statement "POPUI 02H, @ 00H" loads the value 70H into the destination general register 02H. The user stack pointer (register 00H) is then incremented by one, changing its value from 01H to 02H.

6.3.50 PUSH-Push to Stack

PUSH src

Operation: SP ← SP – 1
@SP ← src

A PUSH instruction decrements the stack pointer value and loads the contents of the source (src) into the location addressed by the decremented stack pointer. The operation then adds the new value to the top of the stack.

Flags: No flags are affected.

Format:

	Bytes	Cycles	Opcode (Hex)	Addr Mode dst
opc | src	2	8 (internal clock)	70	R
		8 (external clock)		
		8 (internal clock)		
		8 (external clock)	71	IR

Examples: Given: Register 40H = 4FH, register 4FH = 0AAH, SPH = 00H, and SPL = 00H:

```
PUSH    40H     →      Register 40H = 4FH, stack register 0FFH = 4FH,
                       SPH = 0FFH, SPL = 0FFH
PUSH    @40H    →      Register 40H = 4FH, register 4FH = 0AAH, stack register
                       0FFH = 0AAH, SPH = 0FFH, SPL = 0FFH
```

In the first example, if the stack pointer contains the value 0000H, and general register 40H the value 4FH, the statement "PUSH 40H" decrements the stack pointer from 0000 to 0FFFFH. It then loads the contents of register 40H into location 0FFFFH and adds this new value to the top of the stack.

6.3.51 PUSHUD-Push User Stack (Decrementing)

PUSHUD dst, src

Operation: IR ← IR – 1
dst ← src

This instruction is used to address user-defined stacks in the register file. PUSHUD decrements the user stack pointer and loads the contents of the source into the register addressed by the decremented stack pointer.

Flags: No flags are affected.

Format:

			Bytes	Cycles	Opcode (Hex)	Addr Mode dst	Addr Mode src
opc	dst	src	3	8	82	IR	R

Example: Given: Register 00H = 03H, register 01H = 05H, and register 02H = 1AH:

```
PUSHUD @00H, 01H      →      Register 00H = 02H, register 01H = 05H, register 02H = 05H
```

If the user stack pointer (register 00H, for example) contains the value 03H, the statement "PUSHUD @ 00H, 01H" decrements the user stack pointer by one, leaving the value 02H. The 01H register value, 05H, is then loaded into the register addressed by the decremented user stack pointer.

6.3.52 PUSHUI-Push User Stack (Incrementing)

PUSHUI dst, src

Operation: IR ← IR + 1
dst ← src

This instruction is used for user-defined stacks in the register file. PUSHUI increments the user stack pointer and then loads the contents of the source into the register location addressed by the incremented user stack pointer.

Flags: No flags are affected.

Format:

			Bytes	Cycles	Opcode (Hex)	Addr Mode dst	Addr Mode src
opc	dst	src	3	8	83	IR	R

Example: Given: Register 00H = 03H, register 01H = 05H, and register 04H = 2AH:

```
PUSHUI @00H, 01H      →      Register 00H = 04H, register 01H = 05H, register 04H = 05H
```

If the user stack pointer (register 00H, for example) contains the value 03H, the statement "PUSHUI @ 00H, 01H" increments the user stack pointer by one, leaving the value 04H. The 01H register value, 05H, is then loaded into the location addressed by the incremented user stack pointer.

6.3.53 RCF-Reset Carry Flag

RCF RCF

Operation: C ← 0

The carry flag is cleared to logic zero, regardless of its previous value.

Flags: **C:** Cleared to "0".

No other flags are affected.

Format:

	Bytes	Cycles	Opcode (Hex)
opc	1	4	CF

Example: Given: C = "1" or "0":

The instruction RCF clears the carry flag (C) to logic zero.

6.3.54 RET-Return

RET

Operation: PC ← @SP
SP ← SP + 2

The RET instruction is normally used to return to the previously executing procedure at the end of a procedure entered by a CALL instruction. The contents of the location addressed by the stack pointer are popped into the program counter. The next statement that is executed is the one that is addressed by the new program counter value.

Flags: No flags are affected.

Format:

	Bytes	Cycles	Opcode (Hex)
opc	1	8 (internal stack) 10 (internal stack)	AF

Example: Given: SP = 00FCH, (SP) = 101AH, and PC = 1234:

```
RET     →     PC = 101AH, SP = 00FEH
```

The statement "RET" pops the contents of stack pointer location 00FCH (10H) into the high byte of the program counter. The stack pointer then pops the value in location 00FEH (1AH) into the PC's low byte and the instruction at location 101AH is executed. The stack pointer now points to memory location 00FEH.

6.3.55 RL-Rotate Left

RL dst

Operation: C ← dst (7)
dst (0) ← dst (7)
dst (n + 1) ← dst (n), n = 0–6

The contents of the destination operand are rotated left one bit position. The initial value of bit 7 is moved to the bit zero (LSB) position and also replaces the carry flag.

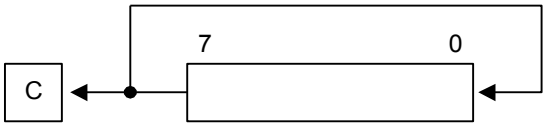

Flags:

C: Set if the bit rotated from the most significant bit position (bit 7) was "1".

Z: Set if the result is "0"; cleared otherwise.

S: Set if the result bit 7 is set; cleared otherwise.

V: Set if arithmetic overflow occurred; cleared otherwise.

D: Unaffected.

H: Unaffected.

Format:

	Bytes	Cycles	Opcode (Hex)	Addr Mode dst
opc | dst	2	4	90	R
		4	91	IR

Examples: Given: Register 00H = 0AAH, register 01H = 02H and register 02H = 17H:

```
RL      00H     →      Register 00H = 55H, C = "1"
RL      @01H    →      Register 01H = 02H, register 02H = 2EH, C = "0"
```

In the first example, if general register 00H contains the value 0AAH (10101010B), the statement "RL 00H" rotates the 0AAH value left one bit position, leaving the new value 55H (01010101B) and setting the carry and overflow flags.

6.3.56 RLC-Rotate Left Through Carry

RLC dst

Operation: dst (0) ← C
C ← dst (7)
dst (n + 1) ← dst (n), n = 0 – 6

The contents of the destination operand with the carry flag are rotated left one bit position. The initial value of bit 7 replaces the carry flag (C); the initial value of the carry flag replaces bit zero.

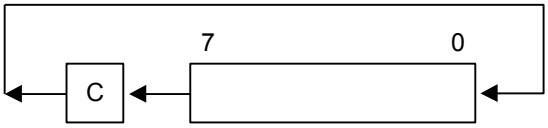

Flags:

C: Set if the bit rotated from the most significant bit position (bit 7) was "1".

Z: Set if the result is "0"; cleared otherwise.

S: Set if the result bit 7 is set; cleared otherwise.

V: Set if arithmetic overflow occurred, that is, if the sign of the destination changed during rotation; cleared otherwise.

D: Unaffected.

H: Unaffected.

Format:

	Bytes	Cycles	Opcode (Hex)	Addr Mode dst
opc | dst	2	4	10	R
		4	11	IR

Examples: Given: Register 00H = 0AAH, register 01H = 02H, and register 02H = 17H, C = "0":

```
RLC     00H     □       Register 00H = 54H, C = "1"
RLC     @01H    □       Register 01H = 02H, register 02H = 2EH, C = "0"
```

In the first example, if general register 00H has the value 0AAH (10101010B), the statement "RLC 00H" rotates 0AAH one bit position to the left. The initial value of bit 7 sets the carry flag and the initial value of the C flag replaces bit zero of register 00H, leaving the value 55H (01010101B). The MSB of register 00H resets the carry flag to "1" and sets the overflow flag.

6.3.57 RR-Rotate Right

RR dst

Operation: C ← dst (0)
dst (7) ← dst (0)
dst (n) ← dst (n + 1), n = 0 – 6

The contents of the destination operand are rotated right one bit position. The initial value of bit zero (LSB) is moved to bit 7 (MSB) and also replaces the carry flag (C).

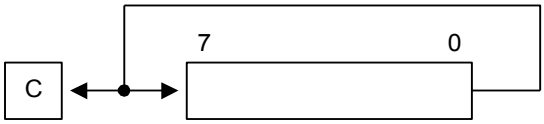

Flags:

C: Set if the bit rotated from the least significant bit position (bit zero) was "1".

Z: Set if the result is "0"; cleared otherwise.

S: Set if the result bit 7 is set; cleared otherwise.

V: Set if arithmetic overflow occurred, that is, if the sign of the destination changed during rotation; cleared otherwise.

D: Unaffected.

H: Unaffected.

Format:

	Bytes	Cycles	Opcode (Hex)	Addr Mode dst
opc | dst	2	4	E0	R
		4	E1	IR

Examples: Given: Register 00H = 31H, register 01H = 02H, and register 02H = 17H:

```
RR      00H     □       Register 00H = 98H, C = "1"
RR      @01H    □       Register 01H = 02H, register 02H = 8BH, C = "1"
```

In the first example, if general register 00H contains the value 31H (00110001B), the statement "RR 00H" rotates this value one bit position to the right. The initial value of bit zero is moved to bit 7, leaving the new value 98H (10011000B) in the destination register. The initial bit zero also resets the C flag to "1" and the sign flag and overflow flag are also set to "1".

6.3.58 RRC-Rotate Right through Carry

RRC dst

Operation: dst (7) ← C
C ← dst (0)
dst (n) ← dst (n + 1), n = 0 – 6

The contents of the destination operand and the carry flag are rotated right one bit position. The initial value of bit zero (LSB) replaces the carry flag; the initial value of the carry flag replaces bit 7 (MSB).

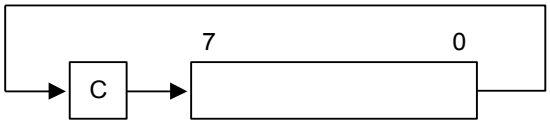

Flags:

C: Set if the bit rotated from the least significant bit position (bit zero) was "1".

Z: Set if the result is "0" cleared otherwise.

S: Set if the result bit 7 is set; cleared otherwise.

V: Set if arithmetic overflow occurred, that is, if the sign of the destination changed during rotation; cleared otherwise.

D: Unaffected.

H: Unaffected.

Format:

	Bytes	Cycles	Opcode (Hex)	Addr Mode dst
opc | dst	2	4	C0	R
		4	C1	IR

Examples: Given: Register 00H = 55H, register 01H = 02H, register 02H = 17H, and C = "0":

```
RRC     00H     □       Register 00H = 2AH, C = "1"
RRC     @01H    □       Register 01H = 02H, register 02H = 0BH, C = "1"
```

In the first example, if general register 00H contains the value 55H (01010101B), the statement "RRC 00H" rotates this value one bit position to the right. The initial value of bit zero ("1") replaces the carry flag and the initial value of the C flag ("1") replaces bit 7. This leaves the new value 2AH (00101010B) in destination register 00H. The sign flag and overflow flag are both cleared to "0".

6.3.59 SB0-Select Bank 0

SB0

Operation: BANK ← 0

The SB0 instruction clears the bank address flag in the FLAGS register (FLAGS.0) to logic zero, selecting bank 0 register addressing in the set 1 area of the register file.

Flags: No flags are affected.

Format:

	Bytes	Cycles	Opcode (Hex)
opc	1	4	4F

Example: The statement

```
SB0
```

Clears FLAGS.0 to "0", selecting bank 0 register addressing.

6.3.60 SB1-Select Bank 1

SB1

Operation: BANK ← 1

The SB1 instruction sets the bank address flag in the FLAGS register (FLAGS.0) to logic one, selecting bank 1 register addressing in the set 1 area of the register file. (Bank 1 is not implemented in some S3F8-series microcontrollers.)

Flags: No flags are affected.

Format:

	Bytes	Cycles	Opcode (Hex)
opc	1	4	5F

Example: The statement

```
SB1
```

Sets FLAGS.0 to "1", selecting bank 1 register addressing, if implemented.

6.3.61 SBC-Subtract with Carry

SBC dst, src

Operation: dst ← dst – src – c

The source operand, along with the current value of the carry flag, is subtracted from the destination operand and the result is stored in the destination. The contents of the source are unaffected. Subtraction is performed by adding the two's-complement of the source operand to the destination operand. In multiple precision arithmetic, this instruction permits the carry ("borrow") from the subtraction of the low-order operands to be subtracted from the subtraction of high-order operands.

Flags:

C: Set if a borrow occurred (src > dst); cleared otherwise.

Z: Set if the result is "0"; cleared otherwise.

S: Set if the result is negative; cleared otherwise.

V: Set if arithmetic overflow occurred, that is, if the operands were of opposite sign and the sign of the result is the same as the sign of the source; cleared otherwise.

D: Always set to "1".

H: Cleared if there is a carry from the most significant bit of the low-order four bits of the result; set otherwise, indicating a "borrow".

Format:

	Bytes	Cycles	Opcode (Hex)	Addr Mode dst	Addr Mode src
opc | dst | src	2	4	32	r	r
		6	33	r	Ir
opc | src | dst	3	6	34	R	R
		6	35	R	IR
opc | dst | src	3	6	36	R	IM

Examples: Given: R1 = 10H, R2 = 03H, C = "1", register 01H = 20H, register 02H = 03H, and register 03H = 0AH:

```
SBC     R1, R2 □       R1 = 0CH, R2 = 03H
SBC     R1, @R2 □      R1 = 05H, R2 = 03H, register 03H = 0AH
SBC     01H, 02H       Register 01H = 1CH, register 02H = 03H
SBC     01H, @02H      Register 01H = 15H,register 02H = 03H, register 03H = 0AH
SBC     01H, #8AH      Register 01H = 95H; C, S, and V = "1"
```

In the first example, if working register R1 contains the value 10H and register R2 the value 03H, the statement "SBC R1, R2" subtracts the source value (03H) and the C flag value ("1") from the destination (10H) and then stores the result (0CH) in register R1.

6.3.62 SCF-Set Carry Flag

SCF

Operation: C ← 1

The carry flag (C) is set to logic one, regardless of its previous value.

Flags: **C:** Set to "1".

No other flags are affected.

Format:

	Bytes	Cycles	Opcode (Hex)
opc	1	4	DF

Example: The statement

```
SCF
```

Sets the carry flag to logic one.

6.3.63 SRA-Shift Right Arithmetic

SRA dst

Operation: dst (7) ← dst (7)
C ← dst (0)
dst (n) ← dst (n + 1), n = 0 – 6

An arithmetic shift-right of one bit position is performed on the destination operand. Bit zero (the LSB) replaces the carry flag. The value of bit 7 (the sign bit) is unchanged and is shifted into bit position 6.

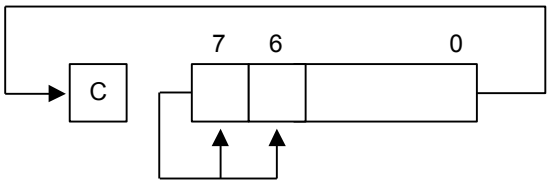

Flags:

C: Set if the bit shifted from the LSB position (bit zero) was "1".

Z: Set if the result is "0"; cleared otherwise.

S: Set if the result is negative; cleared otherwise.

V: Always cleared to "0".

D: Unaffected.

H: Unaffected.

Format:

	Bytes	Cycles	Opcode (Hex)	Addr Mode dst
opc | dst	2	4	D0	R
		4	D1	IR

Examples: Given: Register 00H = 9AH, register 02H = 03H, register 03H = 0BCH, and C = "1":

```
SRA     00H     □       Register 00H = 0CD, C = "0"
SRA     @02H    □       Register 02H = 03H, register 03H = 0DEH, C = "0"
```

In the first example, if general register 00H contains the value 9AH (10011010B), the statement "SRA 00H" shifts the bit values in register 00H right one bit position. Bit zero ("0") clears the C flag and bit 7 ("1") is then shifted into the bit 6 position (bit 7 remains unchanged). This leaves the value 0CDH (11001101B) in destination register 00H.

6.3.64 SRP/SRP0/SRP1-Set Register Pointer

SRP src

SRP0 src

SRP1 src

Operation:

If src (1) = 1 and src (0) = 0 then:	RP0 (3 – 7)	← src (3 – 7)
If src (1) = 0 and src (0) = 1 then:	RP1 (3 – 7)	← src (3 – 7)
If src (1) = 0 and src (0) = 0 then:	RP0 (4 – 7)	← src (4 – 7),
	RP0 (3)	← 0
	RP1 (4–7)	← src (4 – 7),
	RP1 (3)	← 1

The source data bits one and zero (LSB) determine whether to write one or both of the register pointers, RP0 and RP1. Bits 3–7 of the selected register pointer are written unless both register pointers are selected. RP0.3 is then cleared to logic zero and RP1.3 is set to logic one.

Flags: No flags are affected.

Format:

opc	src

Bytes	Cycles	Opcode (Hex)	Addr Mode src
2	4	31	IM

Examples: The statement

```
SRP     #40H
```

Sets register pointer 0 (RP0) at location 0D6H to 40H and register pointer 1 (RP1) at location 0D7H to 48H.

The statement "SRP0 #50H" sets RP0 to 50H, and the statement "SRP1 #68H" sets RP1 to 68H.

6.3.65 STOP-Stop Operation

STOP

Operation:

The STOP instruction stops the both the CPU clock and system clock and causes the microcontroller to enter Stop Mode. During Stop Mode, the contents of on-chip CPU registers, peripheral registers, and I/O port control and data registers are retained. Stop Mode can be released by an external reset operation or by external interrupts. For the reset operation, the RESET pin must be held to Low level until the required oscillation stabilization interval has elapsed.

Flags: No flags are affected.

Format:

	Bytes	Cycles	Opcode (Hex)	Addr Mode dst	Addr Mode src
opc	1	4	7F	–	–

Example: The statement

```
STOP
```

Halts all microcontroller operations.

6.3.66 SUB-Subtract

SUB dst, src

Operation: dst ← dst – src

The source operand is subtracted from the destination operand and the result is stored in the destination. The contents of the source are unaffected. Subtraction is performed by adding the two's complement of the source operand to the destination operand.

Flags:

C: Set if a "borrow" occurred; cleared otherwise.

Z: Set if the result is "0"; cleared otherwise.

S: Set if the result is negative; cleared otherwise.

V: Set if arithmetic overflow occurred, that is, if the operands were of opposite signs and the sign of the result is of the same as the sign of the source operand; cleared otherwise.

D: Always set to "1".

H: Cleared if there is a carry from the most significant bit of the low-order four bits of the result; set otherwise indicating a "borrow".

Format:

	Bytes	Cycles	Opcode (Hex)	Addr Mode dst	Addr Mode src
opc | dst | src	2	4	22	r	r
		6	23	r	Ir
opc | src | dst	3	6	24	R	R
		6	25	R	IR
opc | dst | src	3	6	26	R	IM

Examples: Given: R1 = 12H, R2 = 03H, register 01H = 21H, register 02H = 03H, register 03H = 0AH:

```
SUB     R1, R2 □       R1 = 0FH, R2 = 03H
SUB     R1, @R2 □      R1 = 08H, R2 = 03H
SUB     01H, 02H       Register 01H = 1EH, register 02H = 03H
SUB     01H, @02H      Register 01H = 17H, register 02H = 03H
SUB     01H, #90H      Register 01H = 91H; C, S, and V  =  "1"
SUB     01H, #65H      Register 01H = 0BCH; C and S = "1", V = "0"
```

In the first example, if working register R1 contains the value 12H and if register R2 contains the value 03H, the statement "SUB R1, R2" subtracts the source value (03H) from the destination value (12H) and stores the result (0FH) in destination register R1.

6.3.67 SWAP-Swap Nibbles

SWAP dst

Operation: dst (0 – 3) ← dst (4 – 7)

The contents of the lower four bits and upper four bits of the destination operand are swapped.

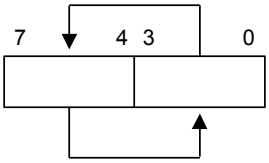

Flags:

C: Undefined.

Z: Set if the result is "0"; cleared otherwise.

S: Set if the result bit 7 is set; cleared otherwise.

V: Undefined.

D: Unaffected.

H: Unaffected.

Format:

	Bytes	Cycles	Opcode (Hex)	Addr Mode dst
opc | dst	2	4	F0	R
		4	F1	IR

Examples: Given: Register 00H = 3EH, register 02H = 03H, and register 03H = 0A4H:

```
SWAP    00H     □       Register 00H = 0E3H
SWAP    @02H    □       Register 02H = 03H, register 03H = 4AH
```

In the first example, if general register 00H contains the value 3EH (00111110B), the statement "SWAP 00H" swaps the lower and upper four bits (nibbles) in the 00H register, leaving the value 0E3H (11100011B).

6.3.68 TCM-Test Complement under Mask

TCM dst, src

Operation: (NOT dst) AND src

This instruction tests selected bits in the destination operand for a logic one value. The bits to be tested are specified by setting a "1" bit in the corresponding position of the source operand (mask). The TCM statement complements the destination operand, which is then ANDed with the source mask. The zero (Z) flag can then be checked to determine the result. The destination and source operands are unaffected.

Flags:

C: Unaffected.

Z: Set if the result is "0"; cleared otherwise.

S: Set if the result bit 7 is set; cleared otherwise.

V: Always cleared to "0".

D: Unaffected.

H: Unaffected.

Format:

	Bytes	Cycles	Opcode (Hex)	Addr Mode dst	Addr Mode src
opc | dst | src	2	4	62	r	r
		6	63	r	Ir
opc | src | dst	3	6	64	R	R
		6	65	R	IR
opc | dst | src	3	6	66	R	IM

Examples: Given: R0 = 0C7H, R1 = 02H, R2 = 12H, register 00H = 2BH, register 01H = 02H, and register 02H = 23H:

```
TCM     R0, R1 □       R0 = 0C7H, R1 = 02H, Z = "1"
TCM     R0, @R1 □      R0 = 0C7H, R1 = 02H, register 02H = 23H, Z = "0"
TCM     00H, 01H       Register 00H = 2BH, register 01H = 02H, Z = "1"
TCM     00H, @01H□     Register 00H = 2BH, register 01H = 02H,
                       register 02H = 23H, Z = "1"
TCM     00H, #34       Register 00H = 2BH, Z = "0"
```

In the first example, if working register R0 contains the value 0C7H (11000111B) and register R1 the value 02H (00000010B), the statement "TCM R0, R1" tests bit one in the destination register for a "1" value. Because the mask value corresponds to the test bit, the Z flag is set to logic one and can be tested to determine the result of the TCM operation.

6.3.69 TM-Test under Mask

TM dst, src

Operation: dst AND src

This instruction tests selected bits in the destination operand for a logic zero value. The bits to be tested are specified by setting a "1" bit in the corresponding position of the source operand (mask), which is ANDed with the destination operand. The zero (Z) flag can then be checked to determine the result. The destination and source operands are unaffected.

Flags:

C: Unaffected.

Z: Set if the result is "0"; cleared otherwise.

S: Set if the result bit 7 is set; cleared otherwise.

V: Always reset to "0".

D: Unaffected.

H: Unaffected.

Format:

	Bytes	Cycles	Opcode (Hex)	Addr Mode dst	Addr Mode src
opc | dst | src	2	4	72	r	r
		6	73	r	Ir
opc | src | dst	3	6	74	R	R
		6	75	R	IR
opc | dst | src	3	6	76	R	IM

Examples: Given: R0 = 0C7H, R1 = 02H, R2 = 18H, register 00H = 2BH, register 01H = 02H, and register 02H = 23H:

```
TM      R0, R1 □       R0  =  0C7H, R1  =  02H, Z  =  "0"
TM      R0, @R1 □      R0  =  0C7H, R1  =  02H, register 02H  =  23H, Z  =  "0"
TM      00H, 01H       Register 00H  =  2BH, register 01H  =  02H, Z  =  "0"
TM      00H, @01H      Register 00H  =  2BH, register 01H =  02H,
                       register 02H  =  23H, Z  =  "0"
TM      00H, #54H      Register 00H  =  2BH, Z  =  "1"
```

In the first example, if working register R0 contains the value 0C7H (11000111B) and register R1 the value 02H (00000010B), the statement "TM R0, R1" tests bit one in the destination register for a "0" value. Because the mask value does not match the test bit, the Z flag is cleared to logic zero and can be tested to determine the result of the TM operation.

6.3.70 WFI-Wait for Interrupt

WFI

Operation:

The CPU is effectively halted until an interrupt occurs, except that DMA transfers can still take place during this wait state. The WFI status can be released by an internal interrupt, including a fast interrupt.

Flags: No flags are affected.

Format:

	Bytes	Cycles	Opcode (Hex)
opc	1	4n (NOTE)	3F

NOTE: n = 1, 2, 3, …

Example: The following sample program structure shows the sequence of operations that follow a "WFI" statement:

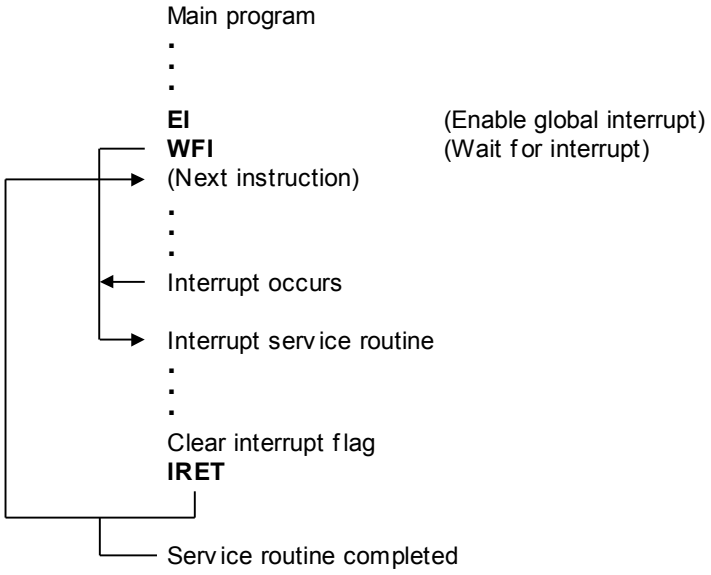

6.3.71 XOR-Logical Exclusive OR

XOR dst, src

Operation: dst ← dst XOR src

The source operand is logically exclusive-ORed with the destination operand and the result is stored in the destination. The exclusive-OR operation results in a "1" bit being stored whenever the corresponding bits in the operands are different; otherwise, a "0" bit is stored.

Flags:

C: Unaffected.

Z: Set if the result is "0"; cleared otherwise.

S: Set if the result bit 7 is set; cleared otherwise.

V: Always reset to "0".

D: Unaffected.

H: Unaffected.

Format:

	Bytes	Cycles	Opcode (Hex)	Addr Mode dst	Addr Mode src
opc | dst | src	2	4	B2	r	r
		6	B3	r	Ir
opc | src | dst	3	6	B4	R	R
		6	B5	R	IR
opc | dst | src	3	6	B6	R	IM

Examples: Given: R0 = 0C7H, R1 = 02H, R2 = 18H, register 00H = 2BH, register 01H = 02H, and register 02H = 23H:

```
XOR     R0, R1 □       R0 = 0C5H, R1 = 02H
XOR     R0, @R1 □      R0 = 0E4H, R1 = 02H, register 02H = 23H
XOR     00H, 01H       Register 00H = 29H, register 01H = 02H
XOR     00H, @01H      Register 00H = 08H, register 01H = 02H, register 02H = 23H
XOR     00H, #54H      Register 00H = 7FH
```

In the first example, if working register R0 contains the value 0C7H and if register R1 contains the value 02H, the statement "XOR R0, R1" logically exclusive-ORs the R1 value with the R0 value and stores the result (0C5H) in the destination register R0.

7 Clock and Power Circuits

7.1 Overview

The clock frequency for the S3F80Q5 can be generated by an external crystal or supplied by an external clock source. The clock frequency for the S3F80Q5 can range from 1 MHz to 8 MHz. The maximum CPU clock frequency, as determined by CLKCON register, is 8 MHz. The X_{IN} and X_{OUT} pins connect the external oscillator or clock source to the on-chip clock circuit.

Typically, application systems have a resister and two separate capacitors across the power pins in order to suppress high frequency noise and provide bulk charge storage for the overall system.

7.1.1 System Clock Circuit

The system clock circuit has the following components:

- External crystal or ceramic resonator oscillation source (or an external clock)
- Oscillator stop and wake-up functions
- Programmable frequency divider for the CPU clock (f_{OSC} divided by 1, 2, 8, or 16)
- Clock circuit control register, CLKCON

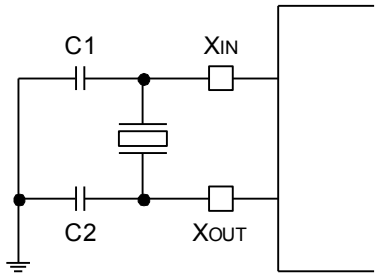

Figure 7-1 Main Oscillator Circuit (External Crystal or Ceramic Resonator)

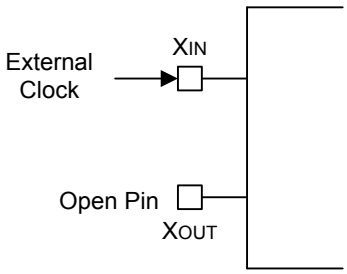

Figure 7-2 External Clock Circuit

7.1.2 Clock Status during Power-Down Modes

The two power-down modes, Stop Mode and Idle mode, affect the system clock as follows:

- In Stop Mode, the main oscillator is halted. When Stop Mode is released, the oscillator starts by a reset operation or by an external interrupt. To enter the Stop Mode, STOPCON (STOP Control Register) has to be loaded with value, #0A5H before STOP instruction execution. After recovering from the Stop Mode by a reset or an external interrupt, STOPCON register is automatically cleared.
- In Idle mode, the internal clock signal is gated away from the CPU, but continues to be supplied to the interrupt structure, timer 0, timer 1, counter A and so on. Idle mode is released by a reset or by an interrupt (external or internally generated).

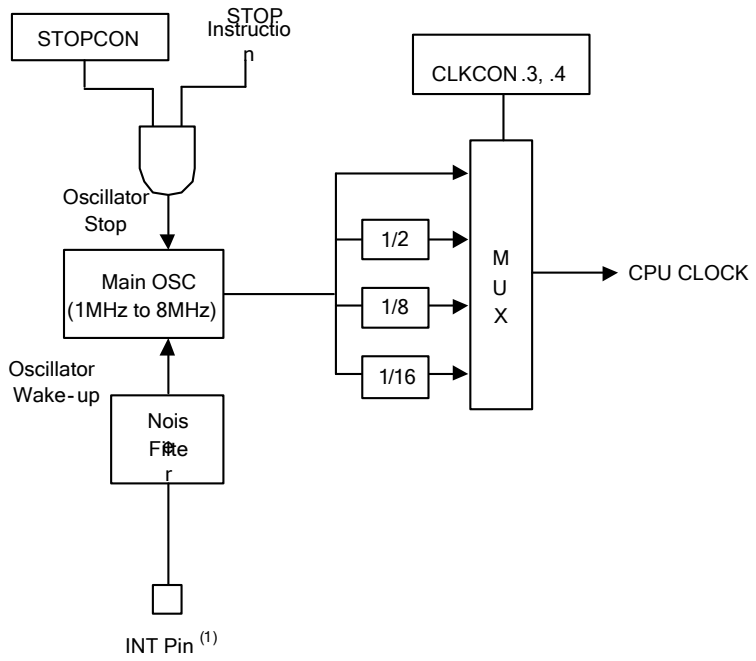

NOTES:
1. An external interrupt with an RC-delay noise filter (for the S3F80Q5 INT0-5) is fixed to release stop mode and "wake up" the main oscillator.
2. Because the S3F80Q5 has no subsystem clock, the 3-bit CLKCON signature code (CLKCON.2-CLKCON.0) is no meaning.

Figure 7-3 System Clock Circuit Diagram

7.1.3 System Clock Control Register (CLKCON)

The system clock control register, CLKCON, is located in address D4H, Set 1, Bank 0.

It is read/write addressable and has the following functions:

- Oscillator frequency divide-by value

The CLKCON.7–.5 and CLKCON.2–.0 Bit are not used in S3F80Q5. After a reset, the main oscillator is activated, and the $f_{OSC/16}$ (the slowest clock speed) is selected as the CPU clock. If necessary, you can then increase the CPU clock speed to f_{OSC}, $f_{OSC/2}$, $f_{OSC/8}$ or $f_{OSC/16}$.

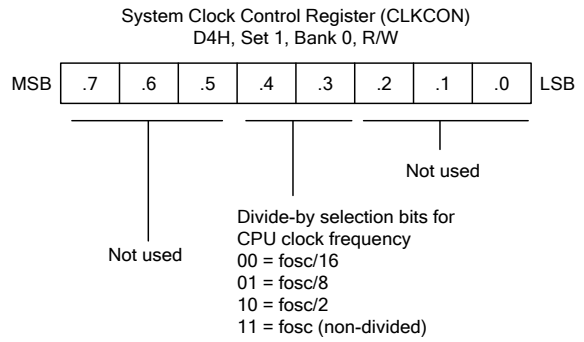

Figure 7-4 System Clock Control Register (CLKCON)

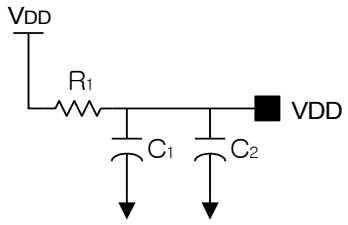

Figure 7-5 Power Circuit (VDD)

Typically, application systems have a resister and two separate capacitors across the power pins. R1 and C1 located as near to the MCU power pins as practical to suppress high-frequency noise. C2 should be a bulk electrolytic capacitor to provide bulk charge storage for the overall system. We recommend that R1 = 10 Ω, C1 = 0.1 μF and C2 = 100 μF.

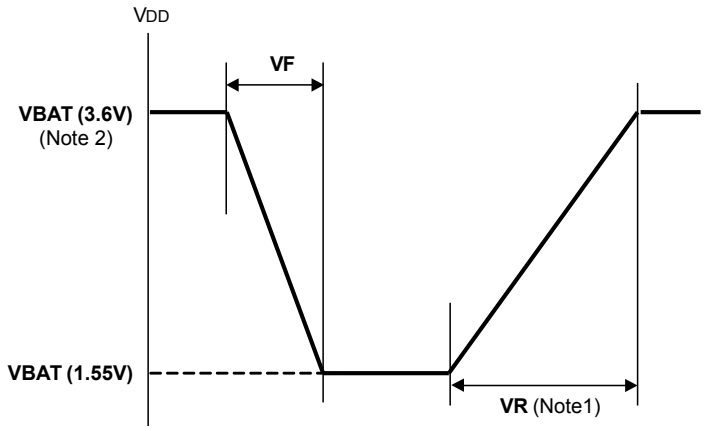

VF: VDD falling time should be at least 100us for stabilized IVC VDD.
VR: VDD rising time should be at least 500us for stabilized IVC VDD.

Figure 7-6 Guide Line of Chip Operating Voltage

Table 7-1 Falling and Rising Time of Operating Voltage

V_{DD} Slope	Min.	Typ.	Max.	Unit
R_{VF}	100	–	–	μs
R_{VR}	500	–	–	
Note: R_{VF} = falling; R_{VR} = rising.				

8 RESET

8.1 Overview

Resetting the MCU is the function to start processing by generating reset signal using several reset schemes. During reset, most control and status are forced to initial values and the program counter is loaded from the reset vector. In case of S3F80Q5, reset vector can be changed by Smart Option. (Refer to page 2-3 or page 14-3).

8.1.1 Reset Sources

The S3F80Q5 has five-different system reset sources as following.

- Watch Dog Timer (WTD): When watchdog timer enables in normal operating, a reset is generated whenever the basic timer overflow occurs.
- Low Voltage Detect (LVD): When VDD is changed in condition for LVD operation in the normal operating mode, reset occurs.
- Internal Power-ON Reset (IPOR): When VDD is changed in condition for IPOR operation, a reset is generated.
- External Interrupt (INT0-INT5): When RESET Control Bit is set to "0" (Smart Option @ 03FH) and chip is in Stop Mode, if external interrupt is enabled, external interrupts by P0 and P2.0 generate the reset signal.
- Stop Error Detection & Recovery (SED&R): When RESET Control Bit is set to "0" (Smart Option @ 03FH) and MCU is in stop or abnormal state, the falling edge input of P0 generates the reset signal regardless of external interrupt enable or disable.

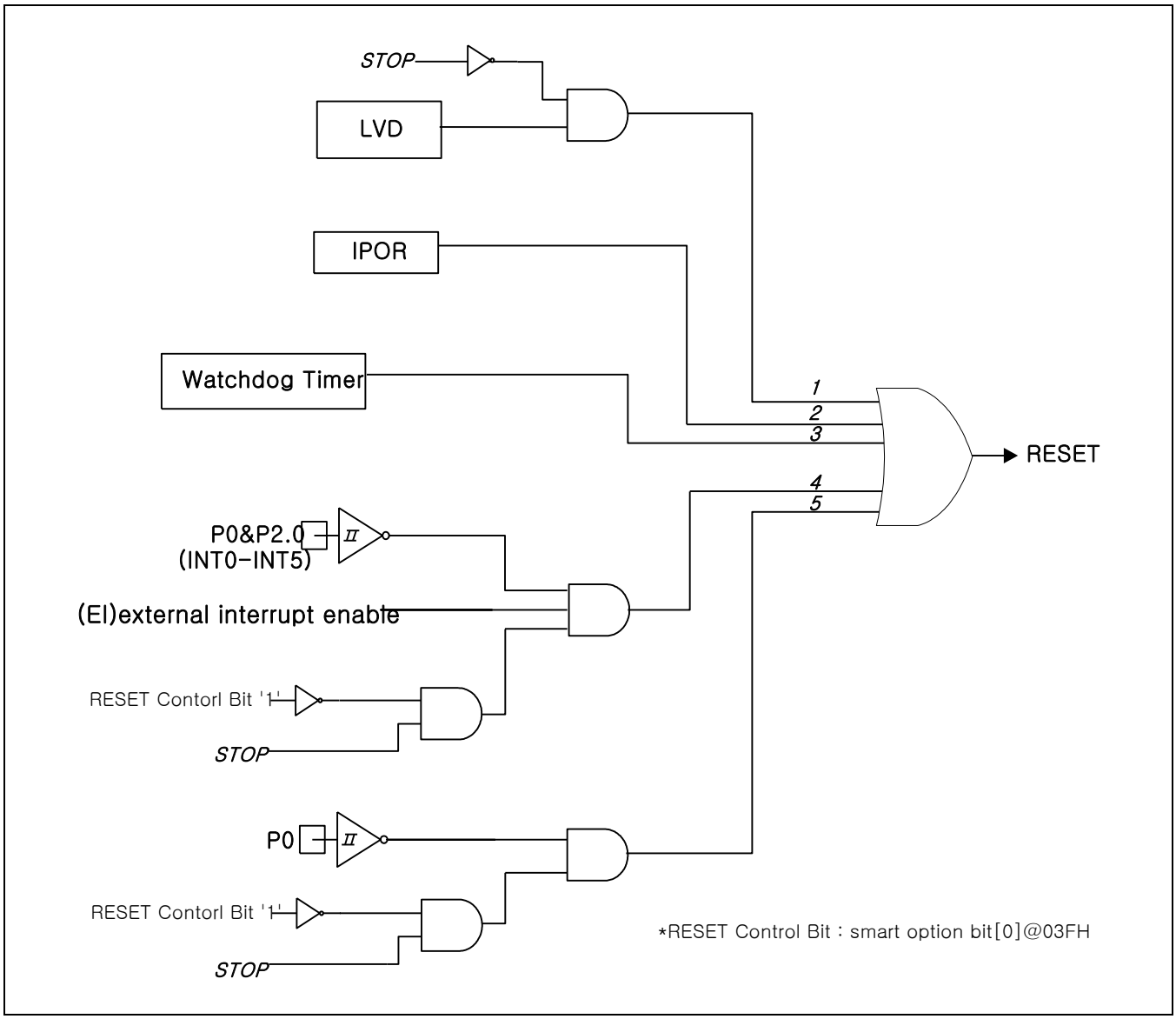

Figure 8-1 RESET Sources of the S3F80Q5

1. The rising edge detection of LVD circuit while rising of VDD passes the level of VLVD.

2. When POR circuit detects VDD below VPOR, reset is generated by internal power-on reset.

3. Basic Timer over-flow for watchdog timer. Refer to Chapter 10 Basic Timer and Timer 0 for more understanding.

4. When RESET Control Bit (Smart Option @ 03FH) is set to "0" and chip is in Stop Mode, external interrupt input by P0 and P2.0 generates the reset signal.

5. When RESET Control Bit (Smart Option @ 03FH) are set to "0" and chip is in Stop Mode or abnormal state, the falling edge input of P0 generates the reset signal regardless of external interrupt enable/disable.

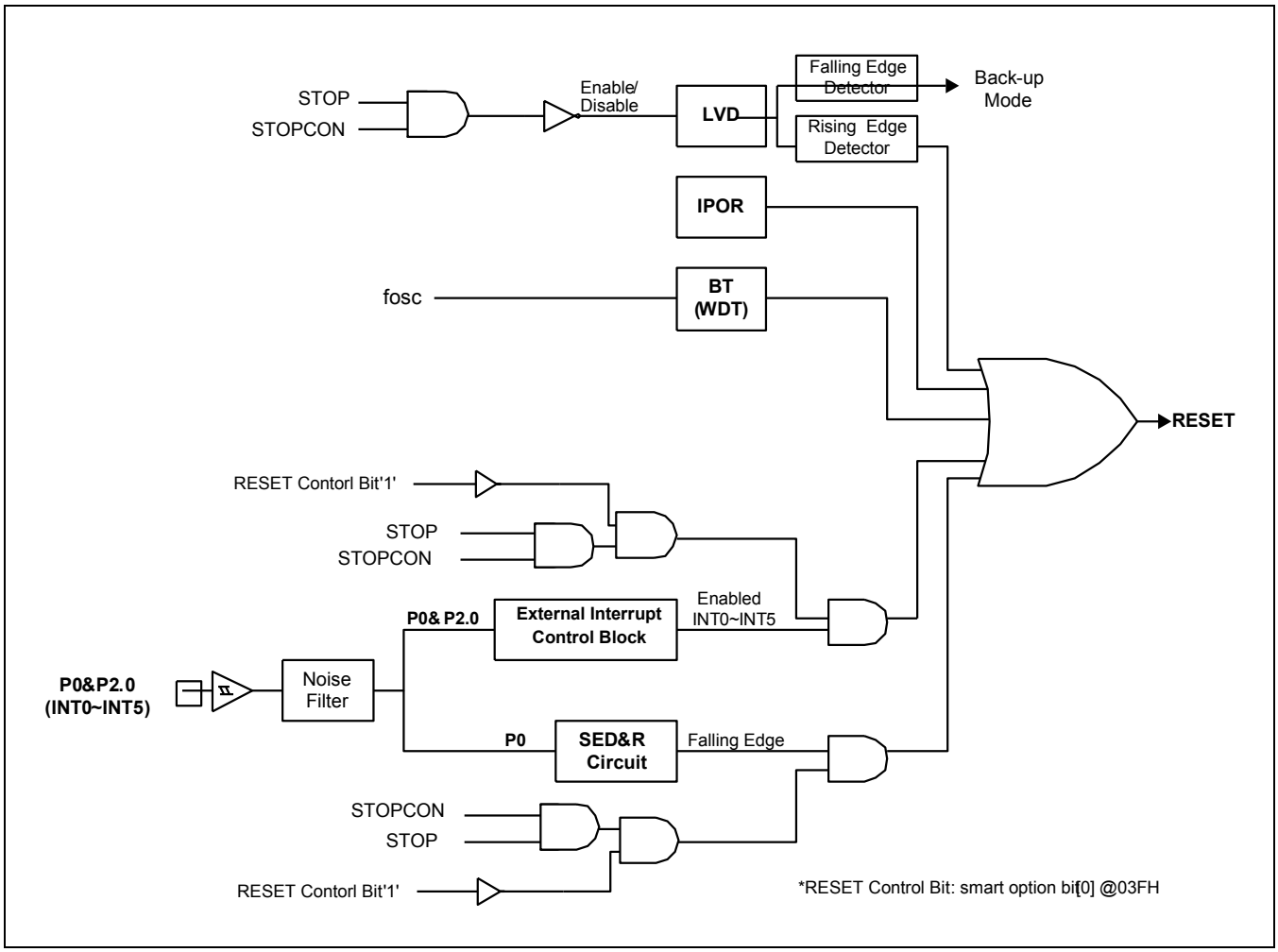

Figure 8-2 RESET Block Diagram of the S3F80Q5

8.1.2 Reset Mechanism

The interlocking work of reset pin and LVD circuit supplies two operating modes: Backup Mode input, and system reset input. Backup Mode input automatically creates a chip stop state when the voltage at V_{DD} is lower than V_{LVD}. When the LVD circuit detects rising edge of V_{DD} on the point V_{LVD}, the reset pulse generator makes a reset pulse, and system reset occurs. When the operating mode is in Stop Mode, the LVD circuit is disabled to reduce the current consumption under 5 μA (at V_{DD} = 3.6 V). Therefore, although the voltage at V_{DD} is lower than V_{LVD}, the chip doesn't go into Backup Mode when the operating state is in Stop Mode.

8.1.3 Watch Dog Timer Reset

The watchdog timer that can recover to normal operation from abnormal function is built in S3F80Q5. Watchdog timer generates a system reset signal, if Basic Timer Counter (BTCNT) isn't cleared within a specific time by program. For more understanding of the watchdog timer function, please see the chapter 10, Basic Timer and Timer 0.

8.1.4 LVD Reset

The Low Voltage Detect Circuit (LVD) is built on the S3F80Q5 product to generate a system reset. LVD is disabled in Stop Mode. When the voltage at V_{DD} is falling down and passing V_{LVD}, the chip enters Backup Mode at the moment "$V_{DD} = V_{LVD}$". As the voltage at V_{DD} is rising up, the reset pulse is occurred at the moment "$V_{DD} \geq V_{LVD}$".

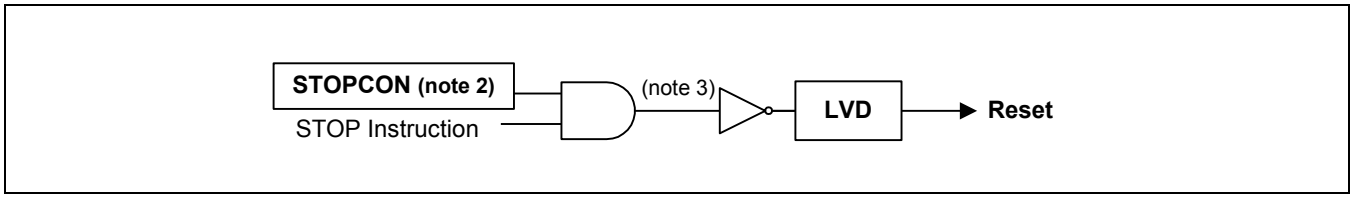

Figure 8-3 RESET Block Diagram by LVD for the S3F80Q5 in Stop Mode

NOTE:

1. LVD is disabled in Stop Mode. LVD always operates in any other operation modes.
2. CPU can enter Stop Mode by setting STOPCON (Stop Control Register) into 0A5H before execution STOP instruction.
3. This signal is output relating to Stop Mode. If STOPCON has 0A5H, and STOP instruction is executed, that output signal makes S3F80Q5 enter Stop Mode. So that is one of two statuses; one is Stop Mode, the other is not Stop Mode.

8.1.5 Internal Power-On Reset

The power-on reset circuit is built on the S3F80Q5 product. When power is initially applied to the MCU, or when V_{DD} drops below the V_{POR}, the POR circuit holds the MCU in reset until V_{DD} has risen above the V_{LVD} level.

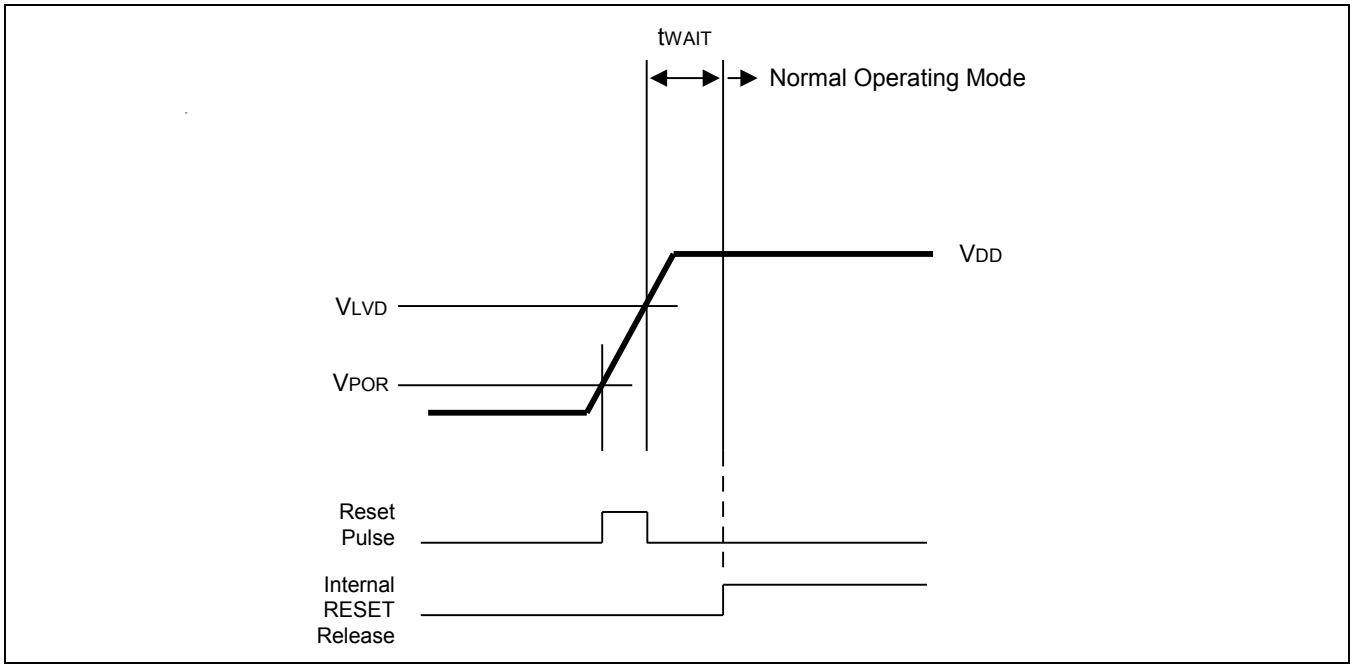

Figure 8-4 Timing Diagram for Internal Power-On Reset Circuit

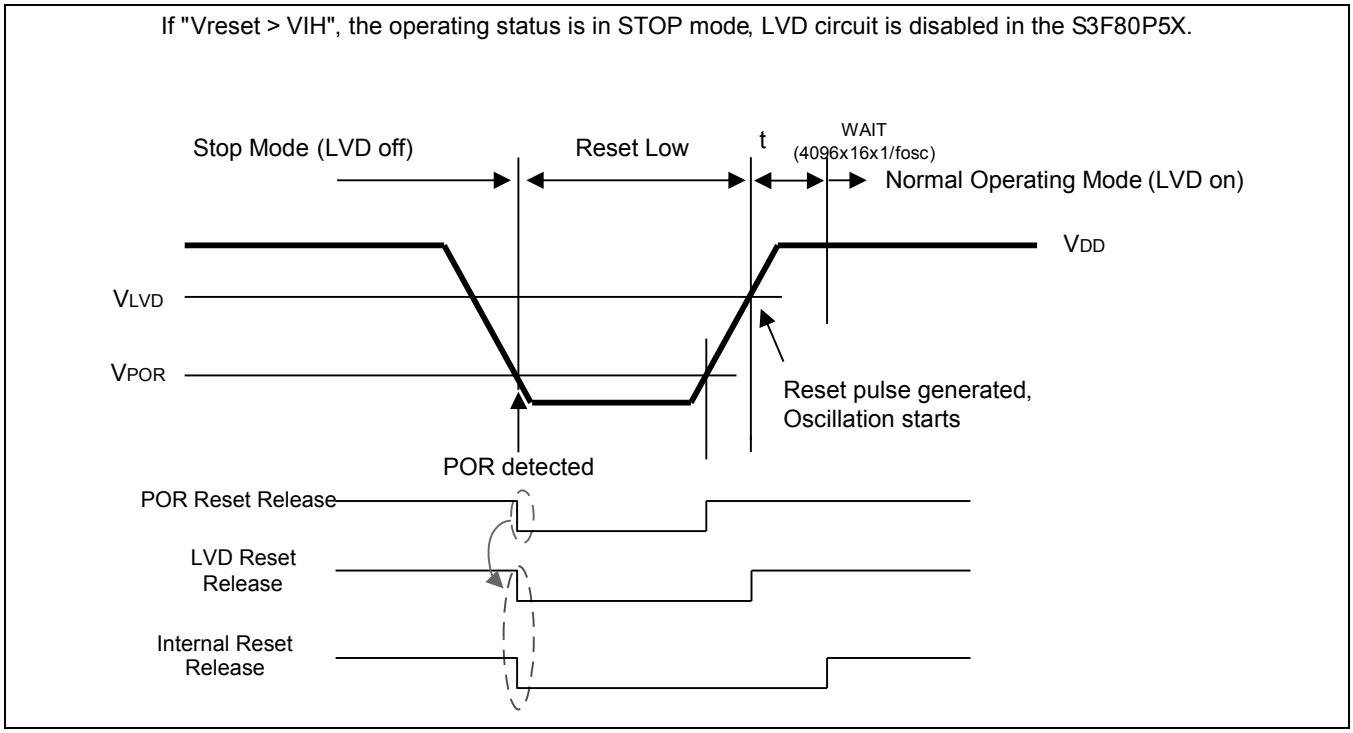

Figure 8-5 Reset Timing Diagram for the S3F80Q5 in Stop Mode by IPOR

8.1.6 External Interrupt Reset

When RESET Control Bit (Smart Option @ 03FH) is set to "0" and chip is in Stop Mode, if external interrupt is occurred by among the enabled external interrupt sources, from INT0 to INT5, reset signal is generated.

8.1.7 Stop Error Detection & Recovery

When RESET Control Bit (Smart Option bit [0] @ 03FH) is set to "0" and chip is in stop or abnormal state, the falling edge input of P0 generates the reset signal.

Refer to following table and figure for more information.

Table 8-1 Reset Condition in Stop Mode

Condition		Reset Source	System Reset
Slope of V_{DD}	V_{DD}		
Rising up from $V_{POR} < V_{DD} < V_{LVD}$	$V_{DD} \geq V_{LVD}$	–	No system reset
Rising up from $V_{DD} < V_{POR}$	$V_{DD} \geq V_{LVD}$	Internal POR	System reset occurs

8.1.8 Power-Down Modes

The power down mode of S3F80Q5 are described following that:

- IDLE mode
- Backup Mode
- Stop Mode

8.1.8.1 Idle Mode

Idle mode is invoked by the instruction IDLE (op-code 6FH). In Idle mode, CPU operations are halted while some peripherals remain active. During Idle mode, the internal clock signal is gated away from the CPU and from all but the following peripherals, which remain active:

- Interrupt logic
- Basic Timer
- Timer 0
- Timer 1
- Timer2
- Counter A
- FRT
- SPI

I/O port pins retain the state (input or output) they had at the time IDLE mode was entered.

8.1.8.1.1 IDLE Mode Release

You can release IDLE mode in one of two ways:

1. Execute a reset. All system and peripheral control registers are reset to their default values and the contents of all data registers are retained. The reset automatically selects the slowest clock (1/16) because of the hardware reset value for the CLKCON register. If all interrupts are masked in the IMR register, a reset is the only way you can release IDLE mode.
2. Activate any enabled interrupt; internal or external. When you use an interrupt to release IDLE mode, the 2-bit CLKCON.4/CLKCON.3 value remains unchanged, and the currently selected clock value is used. The interrupt is then serviced. When the return-from-interrupt condition (IRET) occurs, the instruction immediately following the one which initiated IDLE mode is executed.

NOTE: Only external interrupts built in to the pin circuit can be used to release Stop Mode. To release IDLE mode, you can use either an external interrupt or an internally-generated interrupt.

8.1.9 Backup Mode

For reducing current consumption, S3F80Q5 enters Backup Mode. If a falling level of V_{DD} is detected by LVD circuit on the point of V_{LVD}, chip enters Backup Mode. CPU and peripheral operation are stopped, but LVD is enabled. Because of oscillation stop, the supply current is reduced. In Backup Mode, chip cannot be released from stop state by any interrupt. The only way to release Backup Mode is the system-reset operation by interactive work of LVD circuit. The system reset of watchdog timer does not occur in Backup Mode.

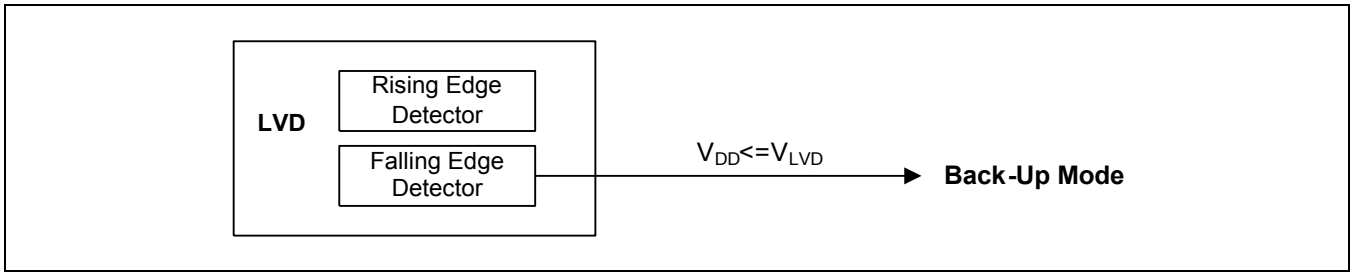

Figure 8-6 Block Diagram for Backup Mode

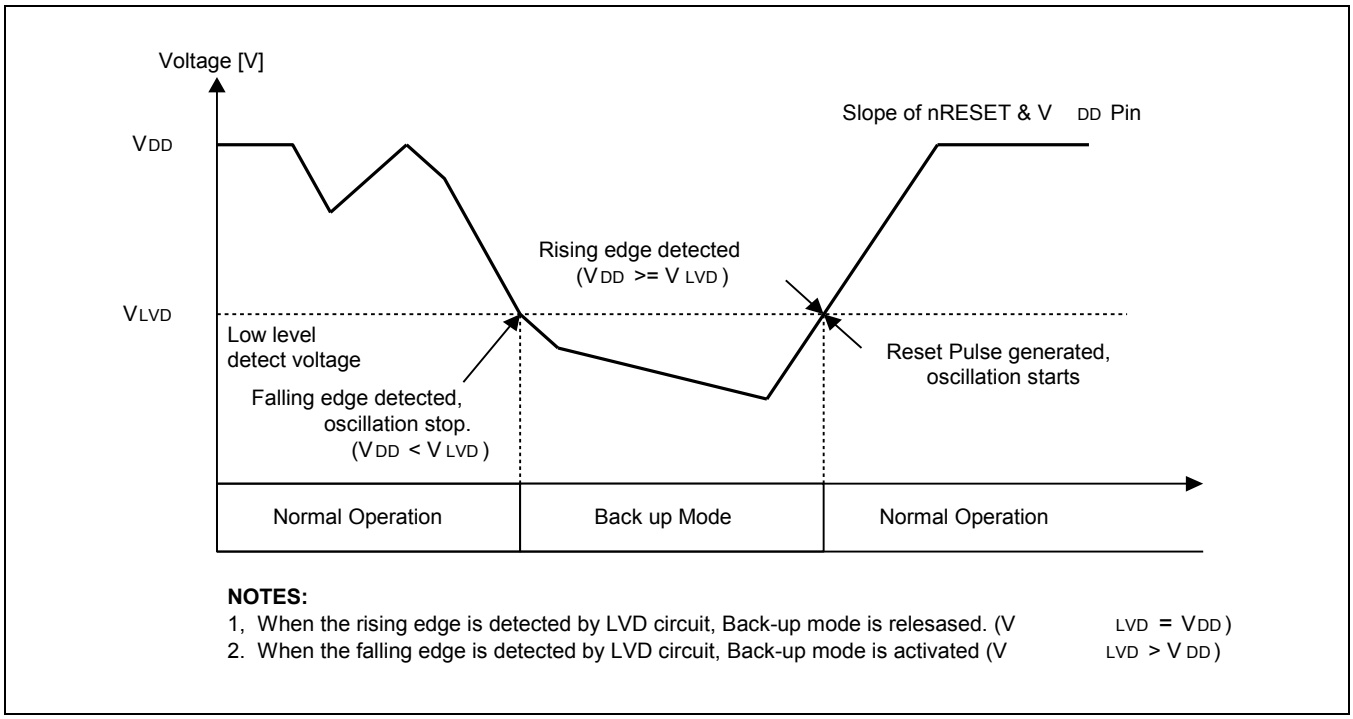

Figure 8-7 Timing Diagram for Backup Mode Input and Released by LVD

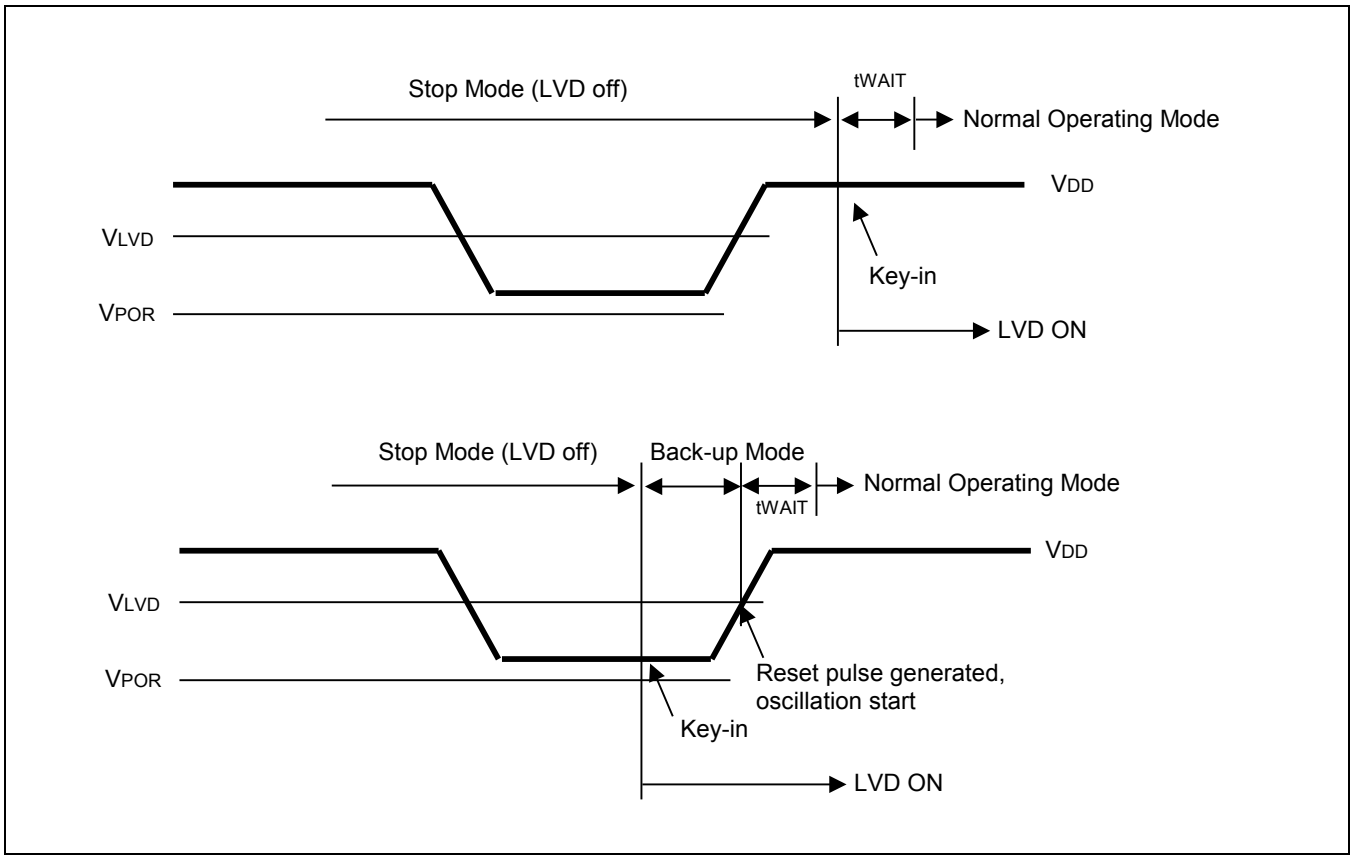

Figure 8-8 Timing Diagram for Backup Mode Input in Stop Mode

8.1.10 Stop Mode

Stop Mode is invoked by executing the instruction "STOP", after setting the stop control register (STOPCON). In Stop Mode, the operation of the CPU and all peripherals is halted. That is, the on-chip main oscillator stops and the current consumption can be reduced. All system functions stop when the clock "freezes", but data stored in the internal register file is retained. However, the status of internal ring oscillator (ICLK, 15 kHz) is configurable. Stop Mode can be released in one of two ways: by a system reset or by an external interrupt. After releasing from Stop Mode, the value of stop control register (STOPCON) is cleared automatically.

Example 8-1 To Enter Stop Mode

This example shows how to enter the Stop Mode.

```
            ORG     0000H                   ; Reset address
            •
            •
            •
            JP      T,START
ENTER_STOP:
            LD      STOPCON,#0A5H
            STOP
            NOP
            NOP
            NOP
            RET

            ORG     0100H-3
            JP      T,START

            ORG     0100H                   ; Reset address
START:
            LD      BTCON,#03               ; Clear basic timer counter.
            •
            •
            •
MAIN:       NOP
            •
            •
            •
            CALL    ENTER_STOP              ; Enter the Stop Mode
            •
            •
            •
            LD      BTCON,#02H              ; Clear basic timer counter.
            JP      T,MAIN
            •
            •
            •
```

8.1.10.1 Sources to Release Stop Mode

Stop Mode is released when following sources go active:

- System Reset by Internal Power-On Reset (IPOR)
- External Interrupt (INT0-INT5)
- FRT interrupt (FRTINT)
- SED & R circuit

8.1.10.2 Using IPOR to Release Stop Mode

Stop Mode is released when the system reset signal goes active by internal power-on reset (IPOR). All system and peripheral control registers are reset to their default hardware values and contents of all data registers are unknown states. When the oscillation stabilization interval has elapsed, the CPU starts the system initialization routine by fetching the program instruction stored in reset address.

8.1.11 Using an FRT Interrupt to Release Stop Mode

FRT interrupts can be used to release Stop Mode. When FRT interrupt is enabled, S3F80Q5 is released from Stop Mode.

8.1.11.1 Using an External Interrupt to Release Stop Mode

External interrupts can be used to release Stop Mode. When RESET Control Bit is set to "0" (Smart Option @ 03FH) and external interrupt is enabled, S3F80Q5 is released from Stop Mode and generates reset signal. On the other hand, when RESET Control Bit are set to "1" (Smart Option @ 03FH), S3F80Q5 is only released from Stop Mode and does not generate reset signal. To wake-up from Stop Mode by external interrupt from INT0 to INT5, external interrupt should be enabled by setting corresponding control registers or instructions.

Please note the following conditions for Stop Mode release:

- If you release Stop Mode using an external interrupt, the current values in system and peripheral control registers are unchanged.
- If you use an external interrupt for Stop Mode release, you can also program the duration of the oscillation stabilization interval. To do this, you must make the appropriate control and clock settings before entering Stop Mode.
- If you use an interrupt to release Stop Mode, the bit-pair setting for CLKCON.4/CLKCON.3 remains unchanged and the currently selected clock value is used.

8.1.11.2 SED & R (STOP Error Detect and Recovery)

The stop Error Detect & Recovery circuit is used to release Stop Mode and prevent abnormal-Stop Mode that can be occurred by battery bouncing. It executes two functions in related to the internal logic of P0. One is releasing from stop status by switching the level of input port (P0) and the other is keeping the chip from entering Stop Mode when the chip is in abnormal status.

- Releasing from Stop Mode
- When RESET Control Bit is set to "0" (Smart Option @ 03FH), if falling edge input signal enters in through Port0, S3F80Q5 is released from Stop Mode and generates reset signal. On the other hand, when RESET Control Bit is set to "1" (Smart Option @ 03FH), S3F80Q5 is only released Stop Mode, reset doesn’t occur. When the falling edge of a pin on Port0 is entered, the chip is released from Stop Mode even though external interrupt is disabled.
- Keeping the chip from entering abnormal-Stop Mode
- This circuit detects the abnormal status by checking the port (P0) status. If the chip is in abnormal status it keeps from entering Stop Mode.

NOTE: In case of P2.0, SED & R circuit isn’t implemented. So although 1pins, P2.0, have the falling edge input signal in Stop Mode, if external interrupt is disabled, the stop state of S3F80Q5 is unchanged. Do not use Stop Mode if you are using an external clock source because Xin input must be cleared internally to VSS to reduce current leakage.

8.1.12 System Reset Operation

System reset starts the oscillation circuit, synchronize chip operation with CPU clock, and initialize the internal CPU and peripheral modules. This procedure brings the S3F80Q5 into a known operating status. To allow time for internal CPU clock oscillation to stabilize, the reset pulse generator must be held to active level for a minimum time interval after the power supply comes within tolerance. The minimum required reset operation for an oscillation stabilization time is 16 oscillation clocks. All system and peripheral control registers are then reset to their default hardware values; (see *Table 8-2*).

In summary, the following sequence of events occurs during a reset operation:

- All interrupts are disabled.
- The watchdog function (Basic Timer) is enabled.
- Port 0, 2 and 3 are set to input mode and all pull-up resistors are disabled for the I/O port pin circuits.
- Peripheral control and data register settings are disabled and reset to their default hardware values. (See *Table 8-2*)
- The program counter (PC) is loaded with the program reset address in the ROM, 0100H.
- When the programmed oscillation stabilization time interval has elapsed, the instruction stored in reset address is fetched and executed.

NOTE: To program the duration of the oscillation stabilization interval, you make the appropriate settings to the basic timer control register, BTCON, before entering Stop Mode. Also, if you do not want to use the basic timer watchdog function (which causes a system reset if a basic timer counter overflow occurs), you can disable it by writing "1010B" to the upper nibble of BTCON. But we recommend you should use it to prevent the chip malfunction.

8.1.13 Hardware Reset Values

Table 8-2 list the reset values for CPU and system registers, peripheral control registers, and peripheral data registers following a reset operation.

The following notation is used to represent reset values:

- A "1" or a "0" shows the reset bit value as logic one or logic zero, respectively.
- An "x" means that the bit value is undefined after a reset.
- A dash ("–") means that the bit is either not used or not mapped (but a 0 is read from the bit position)

Table 8-2 Set 1, Bank 0 Register Values after Reset

Register Name	Mnemonic	Address		Bit Values after Reset							
		Dec	Hex	7	6	5	4	3	2	1	0
Timer 0 counter register	T0CNT	208	D0H	0	0	0	0	0	0	0	0
Timer 0 data register	T0DATA	209	D1H	1	1	1	1	1	1	1	1
Timer 0 control register	T0CON	210	D2H	0	0	0	0	0	0	0	0
Basic timer control register	BTCON	211	D3H	0	0	0	0	0	0	0	0
Clock control register	CLKCON	212	D4H	0	0	0	0	0	0	0	0
System flags register	FLAGS	213	D5H	x	x	x	x	x	x	0	0
Register pointer 0	RP0	214	D6H	1	1	0	0	0	–	–	–
Register pointer 1	RP1	215	D7H	1	1	0	0	1	–	–	–
Location D8H (SPH) is not mapped.											
Stack pointer (low byte)	SPL	217	D9H	x	x	x	x	x	x	x	x
Instruction pointer (high byte)	IPH	218	DAH	x	x	x	x	x	x	x	x
Instruction pointer (low byte)	IPL	219	DBH	x	x	x	x	x	x	x	x
Interrupt request register (read-only)	IRQ	220	DCH	0	0	0	0	0	0	0	0
Interrupt mask register	IMR	221	DDH	x	x	x	x	x	x	x	x
System mode register	SYM	222	DEH	0	–	–	x	x	x	0	0
Register page pointer	PP	223	DFH	0	0	0	0	0	0	0	0
Port 0 data register	P0	224	E0H	0	0	0	0	0	0	0	0
Port 1 data register	P1	225	E1H	0	0	0	0	0	0	0	0
Port 2 data register	P2	226	E2H	0	0	0	0	0	0	0	0
Port 3 data register	P3	227	E3H	0	–	0	0	1	1	0	0
Reserved											
Port 2 interrupt enable register	P2INT	229	E5H	0	0	0	0	0	0	0	0
Port 2 interrupt pending register	P2PND	230	E6H	0	0	0	0	0	0	0	0
Port 0 pull-up enable register	P0PUR	231	E7H	0	0	0	0	0	0	0	0
Port 0 control register (high byte)	P0CONH	232	E8H	0	0	0	0	0	0	0	0
Port 0 control register (low byte)	P0CONL	233	E9H	0	0	0	0	0	0	0	0
Port 1 control register (high byte)	P1CONH	234	EAH	1	1	1	1	1	1	1	1
Port 1 control register (low byte)	P1CONL	235	EBH	0	0	0	0	0	0	0	0
Reserved											
Port 2 control register (low byte)	P2CONL	237	EDH	0	0	0	0	0	0	0	0
Port 2 pull-up enable register	P2PUR	238	EEH	0	0	0	0	0	0	0	0

Register Name	Mnemonic	Address		Bit Values after Reset							
		Dec	Hex	7	6	5	4	3	2	1	0
Port 3 control register	P3CON	239	EFH	0	0	0	0	0	0	0	0
Reserved											
Port 0 interrupt enable register	P0INT	241	F1H	0	0	0	0	0	0	0	0
Port 0 interrupt pending register	P0PND	242	F2H	0	0	0	0	0	0	0	0
Counter A control register	CACON	243	F3H	0	0	0	0	0	0	0	0
Counter A data register (high byte)	CADATAH	244	F4H	1	1	1	1	1	1	1	1
Counter A data register (low byte)	CADATAL	245	F5H	1	1	1	1	1	1	1	1
Timer 1 counter register (high byte)	T1CNTH	246	F6H	0	0	0	0	0	0	0	0
Timer 1 counter register (low byte)	T1CNTL	247	F7H	0	0	0	0	0	0	0	0
Timer 1 data register (high byte)	T1DATAH	248	F8H	1	1	1	1	1	1	1	1
Timer 1 data register (low byte)	T1DATAL	249	F9H	1	1	1	1	1	1	1	1
Timer 1 control register	T1CON	250	FAH	0	0	0	0	0	0	0	0
STOP control register	STOPCON	251	FBH	0	0	0	0	0	0	0	0
Locations FCH is not mapped. (for factory test)											
Basic timer counter	BTCNT	253	FDH	0	0	0	0	0	0	0	0
External memory timing register	EMT	254	FEH	0	1	1	1	1	1	0	–
Interrupt priority register	IPR	255	FFH	x	x	x	x	x	x	x	x

NOTE:

1. Although the SYM register is not used, SYM.5 should always be "0".
   If you accidentally write a 1 to this bit during normal operation, a system malfunction may occur.
2. Except for T0CNTH, T0CNTL, IRQ, T1CNTH, T1CNTL, and BTCNT, which are read-only, all registers in set 1 are read/write addressable.
3. You cannot use a read-only register as a destination field for the instructions OR, AND, LD, and LDB.

Table 8-3 Set 1, Bank 1 Register Values after Reset

Register Name	Mnemonic	Address		Bit Values after Reset							
		Dec	Hex	7	6	5	4	3	2	1	0
LVD control register	LVDCON	224	E0H	–	–	–	–	–	–	–	0
Reserved											
Reserved											
Reserved											
Timer 2 counter register (high byte)	T2CNTH	228	E4H	0	0	0	0	0	0	0	0
Timer 2 counter register (low byte)	T2CNTL	229	E5H	0	0	0	0	0	0	0	0
Timer 2 data register (high byte)	T2DATAH	230	E6H	1	1	1	1	1	1	1	1
Timer 2 data register (low byte)	T2DATAL	231	E7H	1	1	1	1	1	1	1	1
Timer 2 control register	T2CON	232	E8H	0	0	0	0	0	0	0	0
SPI Control Register	SPICON	233	E9H	0	0	0	0	0	0	0	0
SPI Status Register	SPISTAT	234	EAH	0	0	0	1	1	1	1	0
SPI Data Register	SPIDATA	235	EBH	1	1	1	1	1	1	1	1
Flash memory sector address register (high byte)	FMSECH	236	ECH	0	0	0	0	0	0	0	0
Flash memory sector address register (low byte)	FMSECL	237	EDH	0	0	0	0	0	0	0	0
Flash memory user programming enable register	FMUSR	238	EEH	0	0	0	0	0	0	0	0
Flash memory control register	FMCON	239	EFH	0	0	0	0	–	–	–	0
Reset indicating register	RESETID	240	F0H	Refer to Chapter 4 Control Registers							
LVD flag level selection register	LVDSEL	243	F1H	0	0	–	–	–	–	–	–
Port 1 output mode pull-up enable register	P1OUTPU	244	F2H	0	0	0	0	0	0	0	0
Port 2 output mode selection register	P2OUTMD	245	F3H	0	0	0	0	0	0	0	0
Port 3 output mode pull-up enable register	P3OUTPU	246	F4H	–	–	0	0	–	–	0	0
PORT1 Output Mode Selection Register	P1OUTMD	225	F5	0	0	0	0	0	0	0	0
FRT Counter Register 2	FRTCNT2	246	F6H	0	0	0	0	0	0	0	0
FRT Counter Register 1	FRTCNT1	247	F7H	0	0	0	0	0	0	0	0
FRT Counter Register 0	FRTCNT0	248	F8H	0	0	0	0	0	0	0	0
FRT Data Register 2	FRTDATA2	249	F9H	0	0	0	0	0	0	0	0
FRT Data Register 1	FRTDATA1	250	FAH	0	0	0	0	0	0	0	0
FRT Data Register 0	FRTDATA0	251	FBH	0	0	0	0	0	0	0	0
FRT Control Register	FRTCON	252	FCH	0	0	0	0	0	0	0	0

Table 8-4 Reset Generation According to the Condition of Smart Option

Mode	Reset Source		Smart Option 1st bit @3FH			
			1		0	
Normal Operating	Watch Dog Timer Enable		O	Reset	O	Reset
	IPOR		O	Reset	O	Reset
	LVD		O	Reset	O	Reset
	External Interrupt (EI) P0 and P2		X	External ISR	X	External ISR
	External Interrupt (DI) P0 and P2		X	Continue	X	Continue
Stop Mode	Watch Dog Timer Enable		X	STOP	X	STOP
	IPOR		O	STOP Release and Reset	O	STOP Release and Reset
	LVD		X	STOP	X	STOP
	External Interrupt (EI-Enable) P0 and P2		X	STOP Release and External ISR	O	STOP Release and Reset
	SED&R	P0	X	STOP Release and Continue	O	STOP Release and Reset
		P2.0	X	STOP	X	STOP

NOTE:

1. "X" means that a corresponding reset source don't generate reset signal.
   "O" means that a corresponding reset source generates reset signal.
2. "Reset" means that reset signal is generated and chip reset occurs,
3. "Continue" means that it executes the next instruction continuously without ISR execution.
4. "External ISR" means that chip executes the interrupt service routine of generated external interrupt source.
5. "STOP" means that the chip is in stop state.
6. "STOP Release and External ISR" means that chip executes the external interrupt service routine of generated external interrupt source after STOP released.
7. "STOP Release and Continue" means that executes the next instruction continuously after STOP released.

8.1.14 Recommendation for Unusued Pins

To reduce overall power consumption, please configure unused pins according to the guideline description *Table 8-5*.

Table 8-5 Guideline for Unused Pins to Reduced Power Consumption

Pin Name	Recommend	Example
Port 0	• Set Input mode • Enable Pull-up Resister • No Connection for Pins	• P0CONH ← # 00H or 0FFH • P0CONL ← # 00H or 0FFH • P0PUR ← # 0FFH
Port 1	• Set P1.7-P1.4 to Open-Drain Output mode • Set P1.3-P1.0 to Push-pull Output mode • Set P1 Data Register to #00H. • Disable Pull-up Resister • No Connection for Pins	• P1CONH ← # 55H • P1CONL ← # 0AAH • P1 ← # 00H • P1OUTPU ← # 00H
Port 2.0	• Set Push-pull Output mode • Set P2 Data Register to #00H. • Disable Pull-up resister • No Connection for Pins	• P2CONL ← # 0AAH • P2 ← # 00H • P2PUR ← # 00H
P3.0-3.1	• Set Push-pull Output mode • Set P3 Data Register to #00H. • No Connection for Pins	• P3CON ← # 11010010B • P3 ← # 00H
TEST	• Connect to VSS.	–

8.1.15 Summary Table of Backup Mode, Stop Mode, and Reset Status

For more understanding, please see the below description *Table 8-6*.

Table 8-6 Summary of Each Mode

Item/Mode	Backup	Reset Status	Stop
Approach condition	• VDD is lower than VLVD	• The rising edge at VDD is detected by LVD circuit. (When VDD ≥ VLVD) • Watchdog timer overflow signal is activated.	• STOPCON ← #A5H STOP (LD STOPCON, #0A5H) • (STOP)
Port status	• All I/O port is floating status • All the ports become input mode but is blocked. • Disable all pull-up resister	• All I/O port is floating status • Disable all pull-up resisters	• All the ports keep the previous status. • Output port data is not changed.
Control register	• All control register and system register are initialized as list of *Table 8-2*.	• All control register and system register are initialized as list of *Table 8-2*.	–
Releasing condition	• The rising edge of LVD circuit is generated.	• After passing an oscillation warm-up time	• External interrupt or reset • SED & R Circuit.
Others	• There is no current consumption in chip.	• There can be input leakage current in chip.	• It depends on control program

9 I/O Ports

9.1 Overview

The S3F80Q5 microcontroller has four bit-programmable I/O ports, P0, P1, P2 (24-ELP package only), P3. For 24-pin package, two ports, P0 and P1, are 8-bit ports and P2 is a 1-bit port and P3 is a 2-bit port. This gives a total of 19 I/O pins. For 16-pin package, P0 is a 5-bit port, P1 is a 4-bit port and P3 is a 2-bit port. This gives a total of 11 I/O pins.

Each port is bit-programmable and can be flexibly configured to meet application design requirements. The CPU accesses ports by directly writing or reading port registers. No special I/O instructions are required.

For IR applications, port 0, port 1 are usually configured to the keyboard matrix, port 2 is normal I/O pin and port 3 is used to IR drive pins.

Table 9-1, *Table 9-2* give you a general overview of S3F80Q5 I/O port functions.

Table 9-1 Port Configuration Overview (24-ELP)

Port	Configuration Options
Port 0	8-bit(24-ELP) general-purpose I/O port; Input or push-pull output; external interrupt input on falling edges, rising edges, or both edges; all P0 pin circuits have noise filters and interrupt enable/disable register (P0INT) and pending control register (P0PND); Pull-up resistors can be assigned to individual P0 pins using P0PUR register settings. This port is dedicated for key input in IR controller application.
Port 1	8-bit(24-ELP) general-purpose I/O port; Input without or with pull-up, open-drain output, or push-pull output. This port is dedicated for key output in IR controller application. Also, P1.0 to P1.3 can be used for SPI function.
Port 2	1-bit(24-ELP) general-purpose I/O port; Input, push-pull output, or open-drain output. The P2.0 can be used as external interrupt inputs and have noise filters. The P2INT register is used to enable/disable interrupts and P2PND bits can be polled by software for interrupt pending control. Pull-up resistors can be assigned to individual P2 pins using P2PUR register settings.
P3.0-P3.1	2-bit I/O port; P3.0 and P3.1 are configured input functions (Input mode, with or without pull-up, for T0CK, T0CAP or T1CAP) or output functions (push-pull or open-drain output mode, or for REM and T0PWM). P3.1 is dedicated for IR drive pin and P3.0 can be used for indicator LED drive.

9.1.1 Port Data Registers

Table 9-2 gives you an overview of the register locations of all four S3F80Q5 I/O port data registers. Data registers for ports 0, 1 have the general format shown in Figure 9-1 .

NOTE: The data register for port 3, P3, contains 2 bits for P3.0-P3.1, and an additional status bit (P3.7) for carrier signal on/off.

Table 9-2 Port Data Register Summary

Register Name	Mnemonic	Decimal	Hex	Location	R/W
Port 0 data register	P0	224	E0H	Set 1, Bank 0	R/W
Port 1 data register	P1	225	E1H	Set 1, Bank 0	R/W
Port 2 data register	P2	226	E2H	Set 1, Bank 0	R/W
Port 3 data register	P3	227	E3H	Set 1, Bank 0	R/W

Because port 3 is a 2-bit I/O port, the port 3 data register only contains values for P3.0-P3.1. The P3 register also contains a special carrier on/off bit (P3.7). See the port 3 description for details. All other I/O ports except P2 are 8-bit.

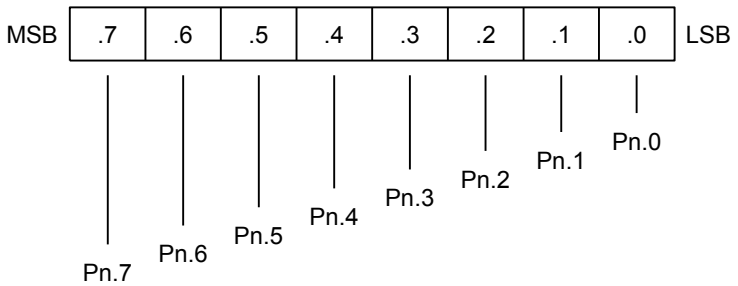

NOTE: Because port 3 is a 2-bit I/O port, the port 3 data register only contains values for P3.0-P3.1.
The P3 register also contains a special carrier on/off bit (P3.7).
See the port 3 description for details.

Figure 9-1 S3F80Q5 I/O Port Data Register Format

9.1.2 Pull-Up Resistor Enable Registers

You can assign pull-up resistors to the pin circuits of individual pins in port0 and port1. To do this, you make the appropriate settings to the corresponding pull-up resistor enable registers; P0PUR. These registers are located in set 1, bank 0 at locations E7H, respectively, and are read/write accessible using Register addressing mode.

You can assign a pull-up resistor to the port 3 pins, P3.0-P3.1 in the input mode using basic port configuration setting in the P3CON registers.

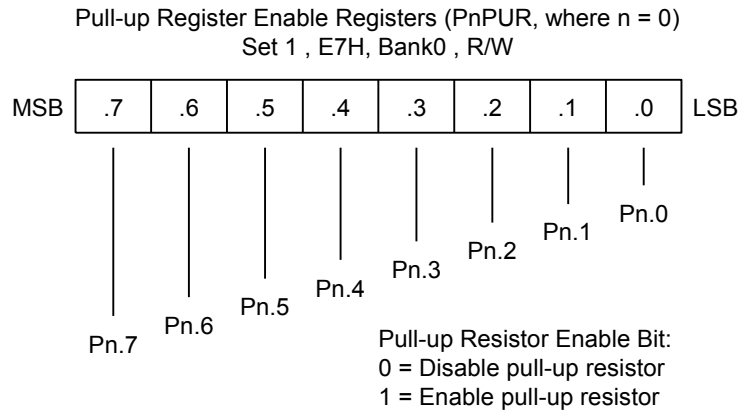

NOTE: Pull-up resistors can be assigned to the port 3 pins, P3.0 - P3.1 by making the appropriate setting the port 3 control register P3CON.

Figure 9-2 Pull-up Resistor Enable Registers (Port 0 and Port 2)

10 Basic Timer and Timer 0

10.1 Overview

The S3F80Q5 has two default timers: the 8-bit basic timer and the 8-bit general-purpose timer/counter. The 8-bit timer/counter is called timer 0.

10.1.1 Basic Timer (BT)

You can use the basic timer (BT) in two different ways:

- As a watchdog timer to provide an automatic reset mechanism in the event of a system malfunction
- To signal the end of the required oscillation stabilization interval after a reset or a Stop Mode release.

The functional components of the basic timer block are:

- Clock frequency divider (f_{OSC} divided by 16384, 4096, 1024 or 128) with multiplexer
- 8-bit basic timer counter, BTCNT (FDH, Set 1, Bank 0, Read-only)
- Basic timer control register, BTCON (D3H, Set 1, Bank 0, R/W)

10.1.1.1 Timer 0

Timer 0 has three operating modes, one of which you select using the appropriate T0CON setting:

- Interval timer mode
- Capture input mode with a rising or falling edge trigger at the P3.0 pin
- PWM mode

Timer 0 has the following functional components:

- Clock frequency divider (f_{OSC} divided by 4096, 256 or 8) with multiplexer
- External clock input pin (T0CK)
- 8-bit timer 0 counter (T0CNT), 8-bit comparator, and 8-bit reference data register (T0DATA)
- I/O pins for capture input (T0CAP) or match output
- Timer 0 overflow interrupt (IRQ0, vector FAH) and match/capture interrupt (IRQ0, vector FCH) generation
- Timer 0 control register, T0CON (D2H, Set 1, Bank 0, R/W)

NOTE: The CPU clock should be faster than basic timer clock and timer 0 clock.

10.1.2 Basic Timer Control Register (BTCON)

The basic timer control register, BTCON, is used to select the input clock frequency, to clear the basic timer counter and frequency dividers, and to enable or disable the watchdog timer function. It is located in Set 1 and Bank0, addresses D3H, and is read/write addressable using register addressing mode.

A reset clears BTCON to "00H". This enables the watchdog function and selects a basic timer clock frequency of $f_{OSC}/4096$. To disable the watchdog function, you must write the signature code "1010B" to the basic timer register control bits BTCON.7-BTCON.4. For improved reliability, using the watchdog timer function is recommended in remote controllers and hand-held product applications.

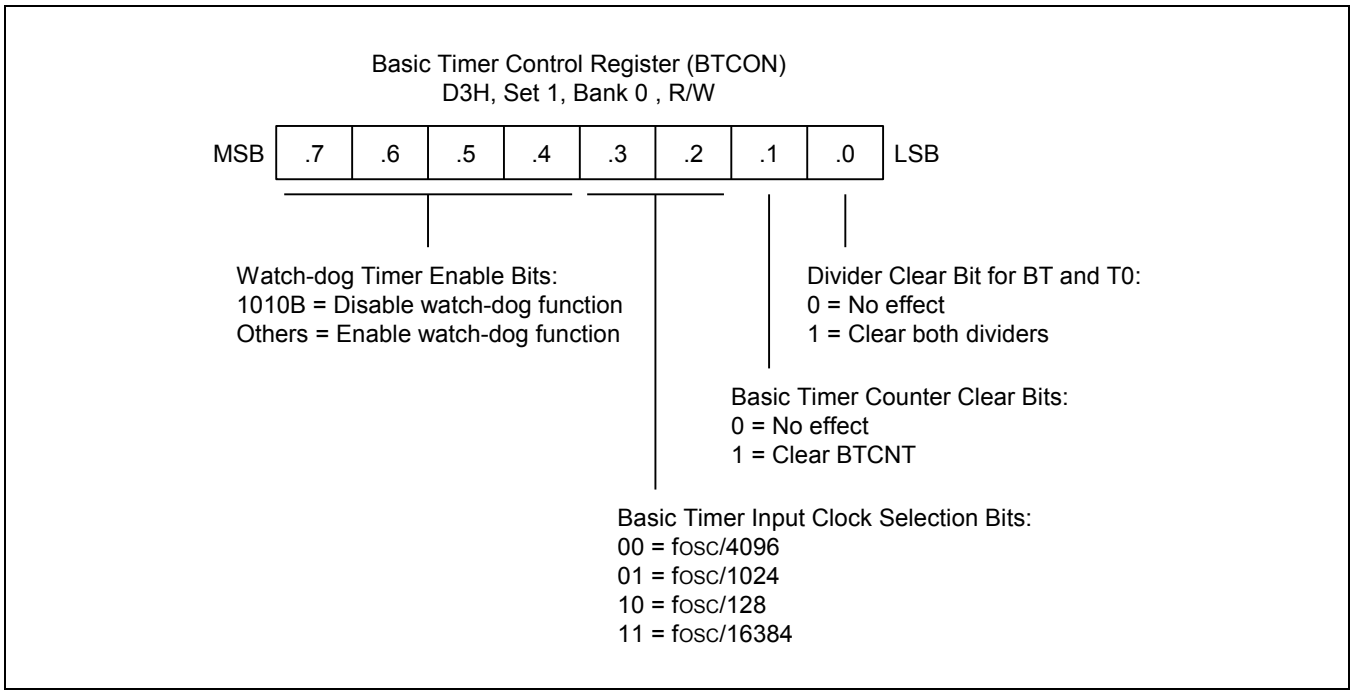

Figure 10-1 Basic Timer Control Register (BTCON)

10.1.3 Basic Timer Function Description

10.1.3.1 WatchdogTimer Function

You can program the basic timer overflow signal (BTOVF) to generate a reset by setting BTCON.7-BTCON.4 to any value other than "1010B". (The "1010B" value disables the watchdog function.) A reset clears BTCON to '00H', automatically enabling the watchdog timer function. A reset also selects the CPU clock (as determined by the current CLKCON register setting), divided by 4096, as the BT clock.

A reset is generated whenever the basic timer overflow occurs. During normal operation, the application program must prevent the overflow, and the accompanying reset operation, from occurring. To do this, the BTCNT value must be cleared (by writing a "1" to BTCON.1) at regular intervals.

If a system malfunction occurs due to circuit noise or some other error condition, the BT counter clear operation will not be executed and a basic timer overflow will occur, initiating a reset. In other words, during normal operation, the basic timer overflow loop (a bit 7 overflow of the 8-bit basic timer counter, BTCNT) is always broken by a BTCNT clear instruction. If a malfunction does occur, a reset is triggered automatically.

10.1.3.2 Oscillation Stabilization Interval Timer Function

You can also use the basic timer to program a specific oscillation stabilization interval following a reset or when Stop Mode has been released by an external interrupt.

In Stop Mode, whenever a reset or an external interrupt occurs, the oscillator starts. The BTCNT value then starts increasing at the rate of $f_{OSC}/4096$ (for reset), or at the rate of the preset clock source (for an external interrupt). When BTCNT.3 overflows, a signal is generated to indicate that the stabilization interval has elapsed and to gate the clock signal off to the CPU so that it can resume normal operation.

In summary, the following events occur when Stop Mode is released:

1. During Stop Mode, a power-on reset or an external interrupt occurs to trigger the Stop Mode release and oscillation starts.
2. If a power-on reset occurred, the basic timer counter will increase at the rate of $f_{OSC}/4096$. If an external interrupt is used to release Stop Mode, the BTCNT value increases at the rate of the preset clock source.
3. Clock oscillation stabilization interval begins and continues until bit 3 of the basic timer counter overflows.
4. When a BTCNT.3 overflow occurs, normal CPU operation resumes.

10.1.4 Timer 0 Control Register (T0CON)

You use the timer 0 control register, T0CON, to

- Select the timer 0 operating mode (interval timer, capture mode, or PWM mode)
- Select the timer 0 input clock frequency
- Clear the timer 0 counter, T0CNT
- Enable the timer 0 overflow interrupt or timer 0 match/capture interrupt
- Clear timer0 match/capture interrupt pending conditions

T0CON is located in Set 1, Bank0, at address D2H, and is read/write addressable using register addressing mode.

A reset clears T0CON to "00H'. This sets timer 0 to normal interval timer mode, selects an input clock frequency of f_{OSC}/4096, and disables all timer 0 interrupts. You can clear the timer 0 counter at any time during normal operation by writing a "1" to T0CON.3.

The timer 0 overflow interrupt (T0OVF) is interrupt level IRQ0 and has the vector address FAH. When a timer0 overflow interrupt occurs and is serviced by the CPU, the pending condition is cleared automatically by hardware.

To enable the timer 0 mach/capture interrupt (IRQ0, vector FCH), you must write T0CON.1 to "1". To detect a match/capture interrupt pending condition, the application program polls T0CON.0. When a "1" is detected, a timer0 match or capture interrupt is pending. When the interrupt request has been serviced, the pending condition must be cleared by software by writing a "0" to the timer0 interrupt pending bit, T0CON.0.

Timer 0 Control Register (T0CON)
D2H' Set 1' Bank0 ' R/W

MSB	.7	.6	.5	.4	.3	.2	.1	.0	LSB

Timer 0 Input Clock Selection Bits:
00 = f_{OSC}/4096
01 = f_{OSC}/256
10 = f_{OSC}/8
11 = External clock (NOTE)

Timer 0 Interrupt Pending Bit:
0 = No interrupt pending
0 = Clear pending bit (when write)
1 = Interrupt is pending

Timer 0 Interrupt Match/capture Enable Bit:
0 = Disable interrupt
1 = Enable interrupt

Timer 0 Overflow Interrupt Enable Bit:
0 = Disable overflow interrupt
1 = Enable overflow interrupt

Timer 0 Counter Clear Bit:
0 = No effect
1 = Clear the timer 0 counter (when write)

Timer 0 Operating Mode Selection Bits:
00 = Interval mode
01 = Capture mode (capture on rising edge' counter running' OVF can occur)
10 = Capture mode (capture on falling edge' counter running' OVF can occur)
11 = PWM mode (OVF interrupt can occur)

NOTE: The external clock source of timer 0 is P3.1/T0CK (Pin 20).

Figure 10-2 Timer 0 Control Register (T0CON)

Timer 0 Data Register (T0DATA)
D1H, Set1, Bank 0 , R/W

MSB	.7	.6	.5	.4	.3	.2	.1	.0	LSB

Reset Value: FFH

Figure 10-3 Timer 0 DATA Register (T0DATA)

10.1.5 Timer 0 Function Description

10.1.5.1 Timer 0 Interrupts (IRQ0, Vectors FAH and FCH)

The timer 0 module can generate two interrupts: the timer 0 overflow interrupt (T0OVF), and the timer 0 match/ capture interrupt (T0INT). T0OVF is interrupt with level IRQ0 and vector FAH. T0INT also belongs to interrupt level IRQ0, but is assigned the separate vector address, FCH.

A timer 0 overflow interrupt (T0OVF) pending condition is automatically cleared by hardware when it has been serviced. The T0INT pending condition must, however, be cleared by the application's interrupt service routine by writing a "1" to the T0CON.0 interrupt pending bit.

10.1.5.2 Interval Timer Mode

In interval timer mode, a match signal is generated when the counter value is identical to the value written to the T0 reference data register, T0DATA. The match signal generates a timer 0 match interrupt (T0INT, vector FCH) and clears the counter.

If, for example, you write the value "10H" to T0DATA, '0BH' to T0CON, the counter will increment until it reaches "10H". At this point, the T0 interrupt request is generated. And after the counter value is reset, counting resumes. With each match, the level of the signal at the timer 0 output pin is inverted; (see *Figure 10-4*).

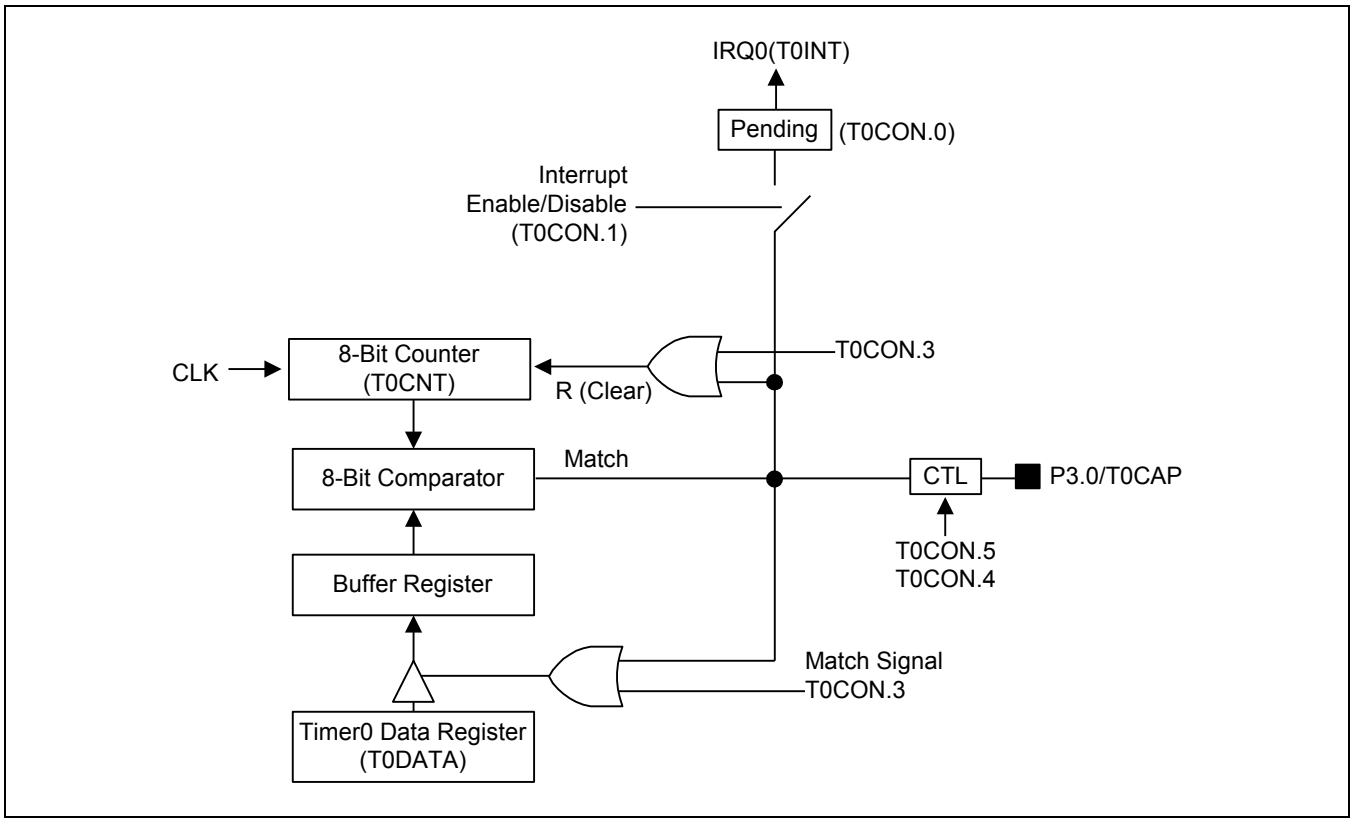

Figure 10-4 Simplified Timer 0 Function Diagram: Interval Timer Mode

10.1.5.3 Pulse Width Modulation Mode

Pulse width modulation (PWM) mode lets you program the width (duration) of the pulse that is output at the T0PWM pin. As in interval timer mode, a match signal is generated when the counter value is identical to the value written to the timer 0 data register. In PWM mode, however, the match signal does not clear the counter. Instead, it runs continuously, overflowing at "FFH", and then continues incrementing from "00H".

Although you can use the match signal to generate a timer 0 overflow interrupt, interrupts are not typically used in PWM-type applications. Instead, the pulse at the T0PWM pin is held to low level as long as the reference data value is less than or equal to (≤) the counter value and then the pulse is held to high level for as long as the data value is greater than (>) the counter value. One pulse width is equal to $t_{CLK} \times 256$; (see *Figure 10-5*).

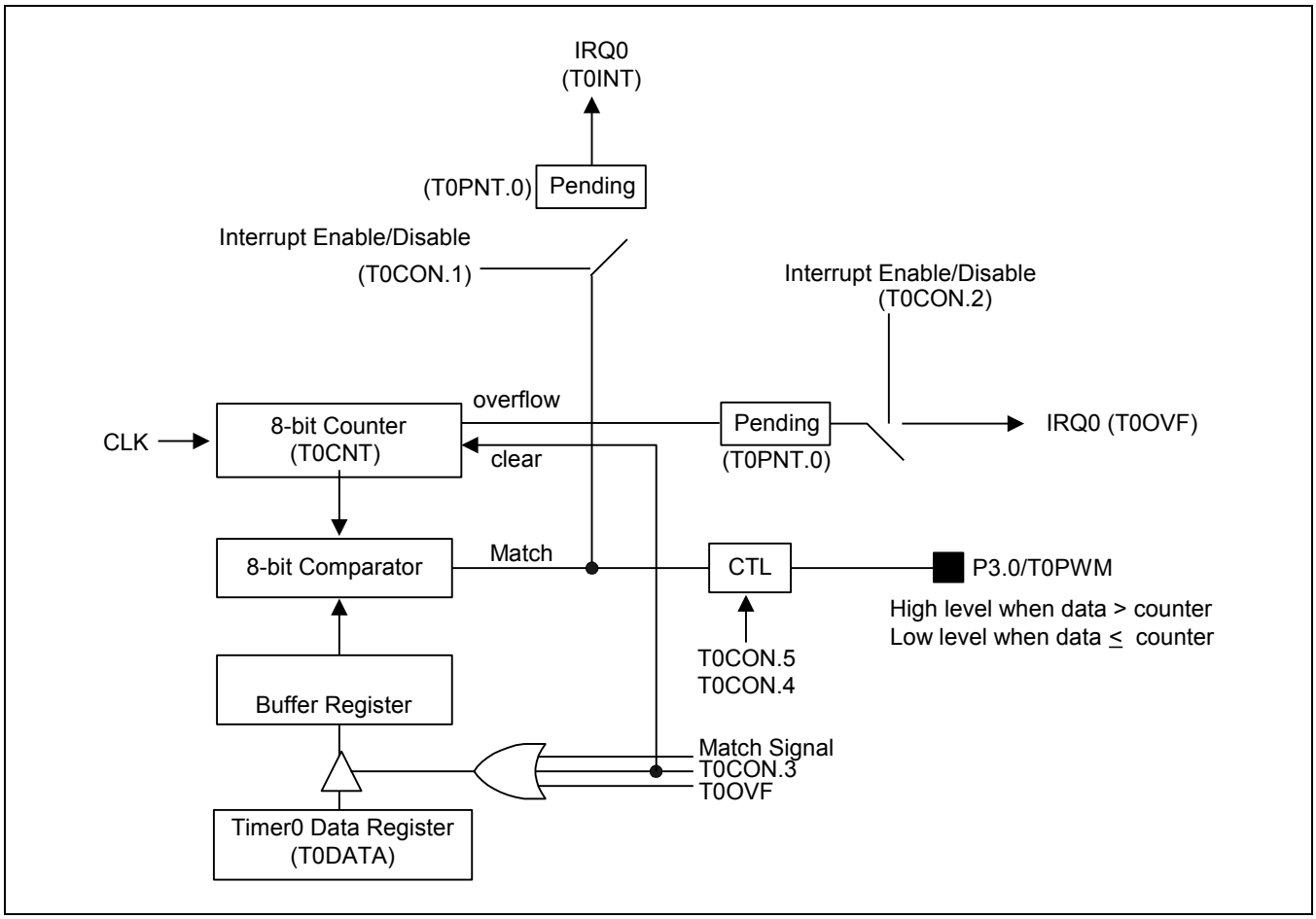

Figure 10-5 Simplified Timer 0 Function Diagram: PWM Mode

10.1.5.4 Capture Mode

In capture mode, a signal edge that is detected at the T0CAP pin opens a gate and loads the current counter value into the T0 data register. You can select rising or falling edges to trigger this operation.

Timer 0 also gives you capture input source: the signal edge at the T0CAP pin. You select the capture input by setting the value of the timer 0 capture input selection bit in the port 3 control register, P3CON.2, (set 1, bank 0, EFH). When P3CON.2 is "1", the T0CAP input is selected. When P3CON.2 is set to "0", normal I/O port (P3.0) is selected.

Both kinds of timer 0 interrupts can be used in capture mode: the timer 0 overflow interrupt is generated whenever a counter overflow occurs; the timer 0 match/capture interrupt is generated whenever the counter value is loaded into the T0 data register.

By reading the captured data value in T0DATA, and assuming a specific value for the timer 0 clock frequency, you can calculate the pulse width (duration) of the signal that is being input at the T0CAP pin; (see *Figure 10-6*).

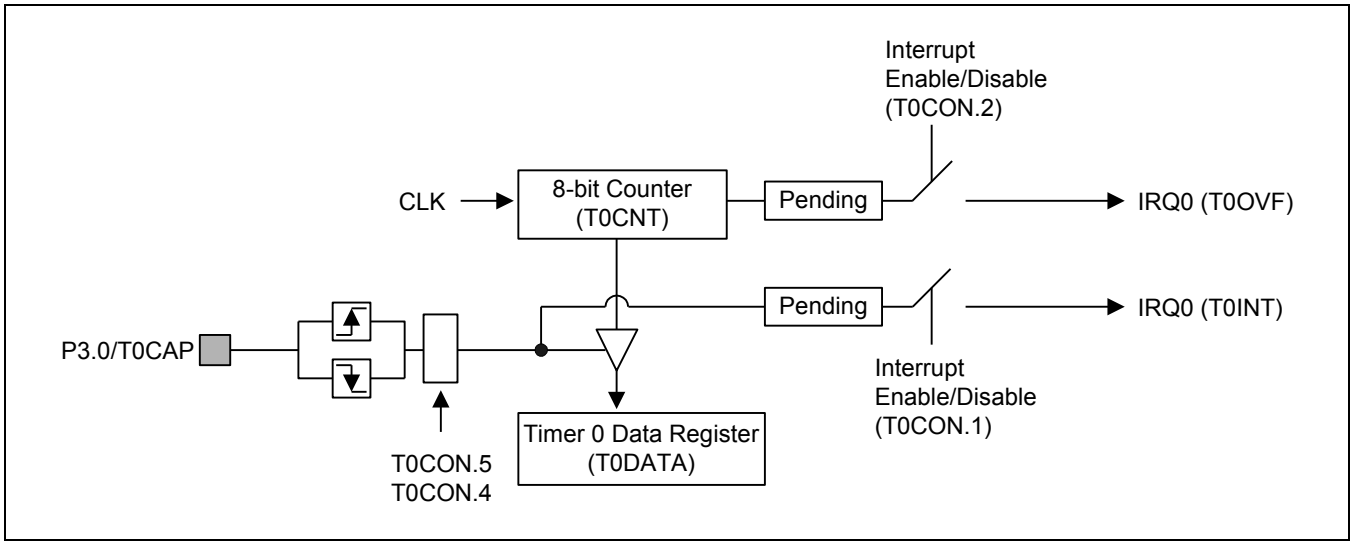

Figure 10-6 Simplified Timer 0 Function Diagram: Capture Mode

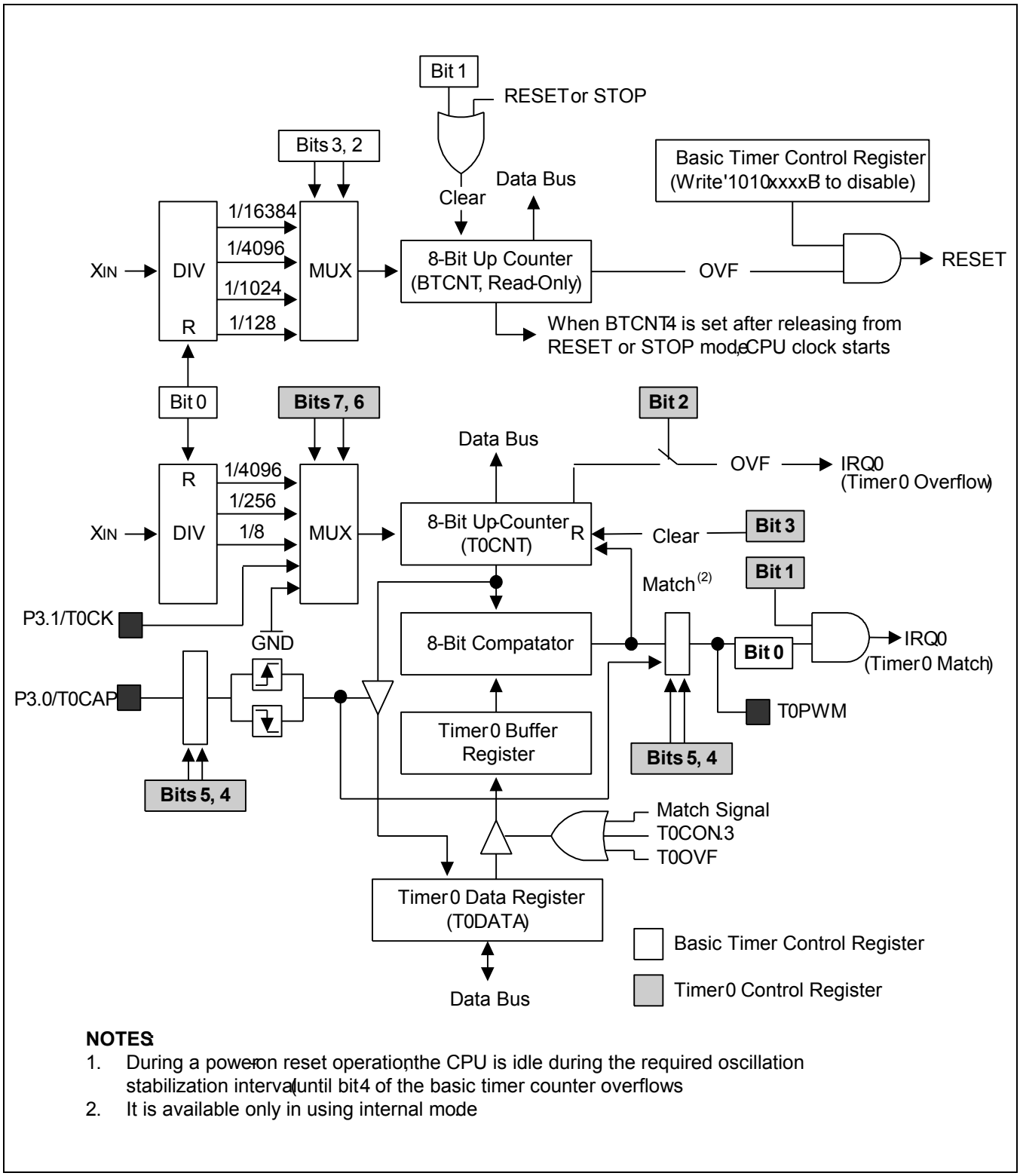

NOTES:

1. During a power-on reset operation, the CPU is idle during the required oscillation stabilization interval (until bit 4 of the basic timer counter overflows).
2. It is available only in using internal mode.

Figure 10-7 Basic Timer and Timer 0 Block Diagram

Example 10-1 Configuring the Basic Timer

This example shows how to configure the basic timer to sample specifications:

```
            ORG     0100H

RESET       DI                          ; Disable all interrupts
            LD      BTCON,#0AAH         ; Disable the watchdog timer
            LD      CLKCON,#18H         ; Non-divided clock
            CLR     SYM                 ; Disable global and fast interrupts
            CLR     SPL                 ; Stack pointer low byte  →  "0"
                                        ; Stack area starts at 0FFH
            •
            •
            •
            SRP     #0C0H               ; Set register pointer →  0C0H
            EI                          ; Enable interrupts
            •
            •
            •
MAIN        LD      BTCON,#52H          ; Enable the watchdog timer
                                        ; Basic timer clock: fOSC/4096
                                        ; Clear basic timer counter
            NOP
            NOP
            •
            •
            •
            JP      T,MAIN
            •
            •
            •
```

Example 10-2 Programming Timer 0

This sample program sets timer 0 to interval timer mode, sets the frequency of the oscillator clock, and determines the execution sequence which follows a timer 0 interrupt.

The program parameters are as follows:

- Timer 0 is used in interval mode; the timer interval is set to 4 milliseconds
- Oscillation frequency is 6 MHz
- General register 60H (page 0) → 60H + 61H + 62H + 63H + 64H (page 0) is executed after a timer 0 interrupt

```
            VECTOR  00FAH,T0OVER                ; Timer 0 overflow interrupt
            VECTOR  00FCH,T0INT                         ; Timer 0 match/capture interrupt

            ORG     0100H
RESET: DI                                       ; Disable all interrupts
            LD      BTCON,#0AAH                 ; Disable the watchdog timer
            LD      CLKCON,#18H                 ; Select non-divided clock
            CLR     SYM                         ; Disable global and fast interrupts
            CLR     SPL                         ; Stack pointer low byte → "0"
                                                ; Stack area starts at 0FFH
            •
            •
            •
            LD      T0CON,#4BH                  ; Write '00100101B'
                                                ; Input clock is fOSC/256
                                                ; Interval timer mode
                                                ; Enable the timer 0 interrupt
                                                ; Disable the timer 0 overflow interrupt
            LD      T0DATA,#5DH                 ; Set timer interval to 4 milliseconds
                                                ; (6 MHz/256) ÷ (93 + 1)= 0.25 kHz (4 ms)

            SRP     #0C0H                       ; Set register pointer →  0C0H
            EI                                  ; Enable interrupts
            •
            •
            •
T0INT:      PUSH    RP0                         ; Save RP0 to stack
            SRP0    #60H                        ; RP0  ←  60H
            INC     R0                          ; R0  ←  R0 + 1
            ADD     R2,R0                       ; R2  ←  R2 + R0
            ADC     R3,R2                       ; R3  ←  R3 + R2 + Carry
            ADC     R4,R0                       ; R4  ←  R4 + R0 + Carry
            CP      R0,#32H                     ; 50 × 4 = 200 ms
            JR      ULT,NO_200MS_SET
            BITS    R1.2                        ; Bit setting (61.2H)
NO_200MS_SET:
            LD      T0CON,#42H                  ; Clear pending bit
            POP     RP0                         ; Restore register pointer 0 value

T0OVER IRET                                     ; Return from interrupt service routine
```

11 Timer 1

11.1 Overview

The S3F80Q5 microcontroller has a 16-bit timer/counter called Timer 1 (T1). For universal remote controller applications, Timer 1 can be used to generate the envelope pattern for the remote controller signal.

Timer 1 has the following components:

- One control register, T1CON (FAH, set 1, Bank0, R/W)
- Two 8-bit counter registers, T1CNTH and T1CNTL (F6H and F7H, set 1, Bank0, read-only)
- Two 8-bit reference data registers, T1DATAH and T1DATAL (F8H and F9H, set 1, Bank0, R/W)
- One 16-bit comparator

You can select one of the following clock sources as the Timer 1 clock:

- Oscillator frequency (f_{OSC}) divided by 4, 8, or 16
- Internal clock input from the counter A module (counter A flip/flop output)

You can use Timer 1 in three ways:

- As a normal free run counter, generating a Timer 1 overflow interrupt (IRQ1, vector F4H) at programmed time intervals.
- To generate a Timer 1 match interrupt (IRQ1, vector F6H) when the 16-bit Timer 1 count value matches the 16-bit value written to the reference data registers.
- To generate a Timer 1 capture interrupt (IRQ1, vector F6H) when a triggering condition exists at the P3.0 (You can select a rising edge, a falling edge, or both edges as the trigger).

In the S3F80Q5 interrupt structure, the Timer 1 overflow interrupt has higher priority than the Timer 1 match or capture interrupt.

NOTE: The CPU clock should be faster than timer 1 clock.

11.1.1 Timer 1 Overflow Interrupt

Timer 1 can be programmed to generate an overflow interrupt (IRQ1, F4H) whenever an overflow occurs in the 16-bit up counter. When you set the Timer 1 overflow interrupt enable bit, T1CON.2, to "1", the overflow interrupt is generated each time the 16-bit up counter reaches "FFFFH". After the interrupt request is generated, the counter value is automatically cleared to "00H" and up counting resumes. By writing a "1" to T1CON.3, you can clear/reset the 16-bit counter value at any time during program operation.

11.1.2 Timer 1 Capture Interrupt

Timer 1 can be used to generate a capture interrupt (IRQ1, vector F6H) whenever a triggering condition is detected at the P3.0 pin. The T1CON.5 and T1CON.4 bit-pair setting is used to select the trigger condition for capture mode operation: rising edges, falling edges, or both signal edges.

In capture mode, program software can poll the Timer 1 match/capture interrupt pending bit, T1CON.0, to detect when a Timer 1 capture interrupt pending condition exists (T1CON.0 = "1"). When the interrupt request is acknowledged by the CPU and the service routine starts, the interrupt service routine for vector F6H must clear the interrupt pending condition by writing a "0" to T1CON.0.

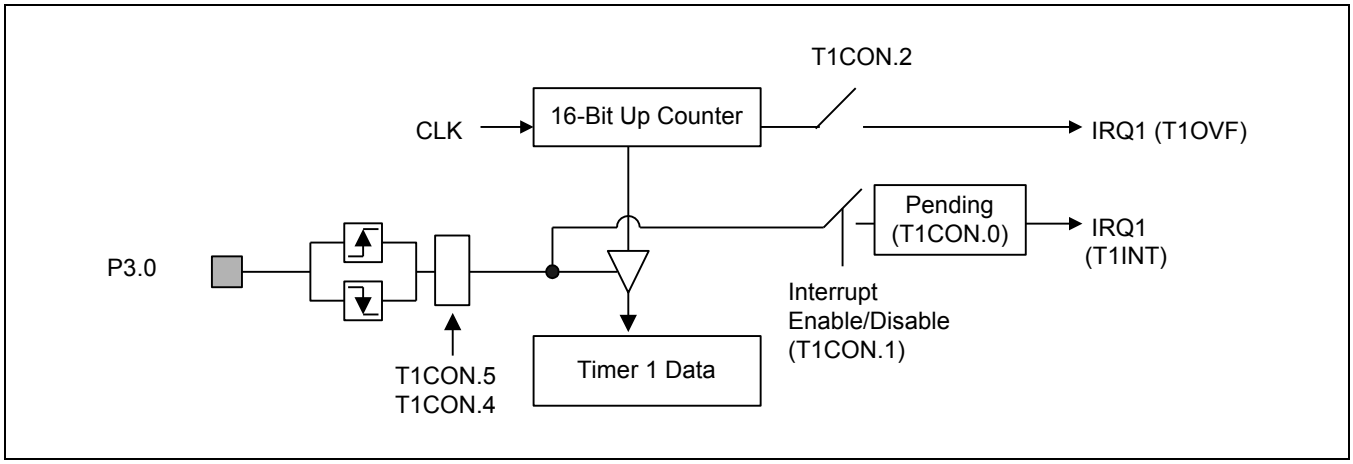

Figure 11-1 Simplified Timer 1 Function Diagram: Capture Mode

11.1.3 Timer 1 Match Interrupt

Timer 1 can also be used to generate a match interrupt (IRQ1, vector F6H) whenever the 16-bit counter value matches the value that is written to the Timer 1 reference data registers, T1DATAH and T1DATAL. When a match condition is detected by the 16-bit comparator, the match interrupt is generated, the counter value is cleared, and up counting resumes from "00H".

In match mode, program software can poll the Timer 1 match/capture interrupt pending bit, T1CON.0, to detect when a Timer 1 match interrupt pending condition exists (T1CON.0 = "1"). When the interrupt request is acknowledged by the CPU and the service routine starts, the interrupt service routine for vector F6H must clear the interrupt pending condition by writing a "0" to T1CON.0.

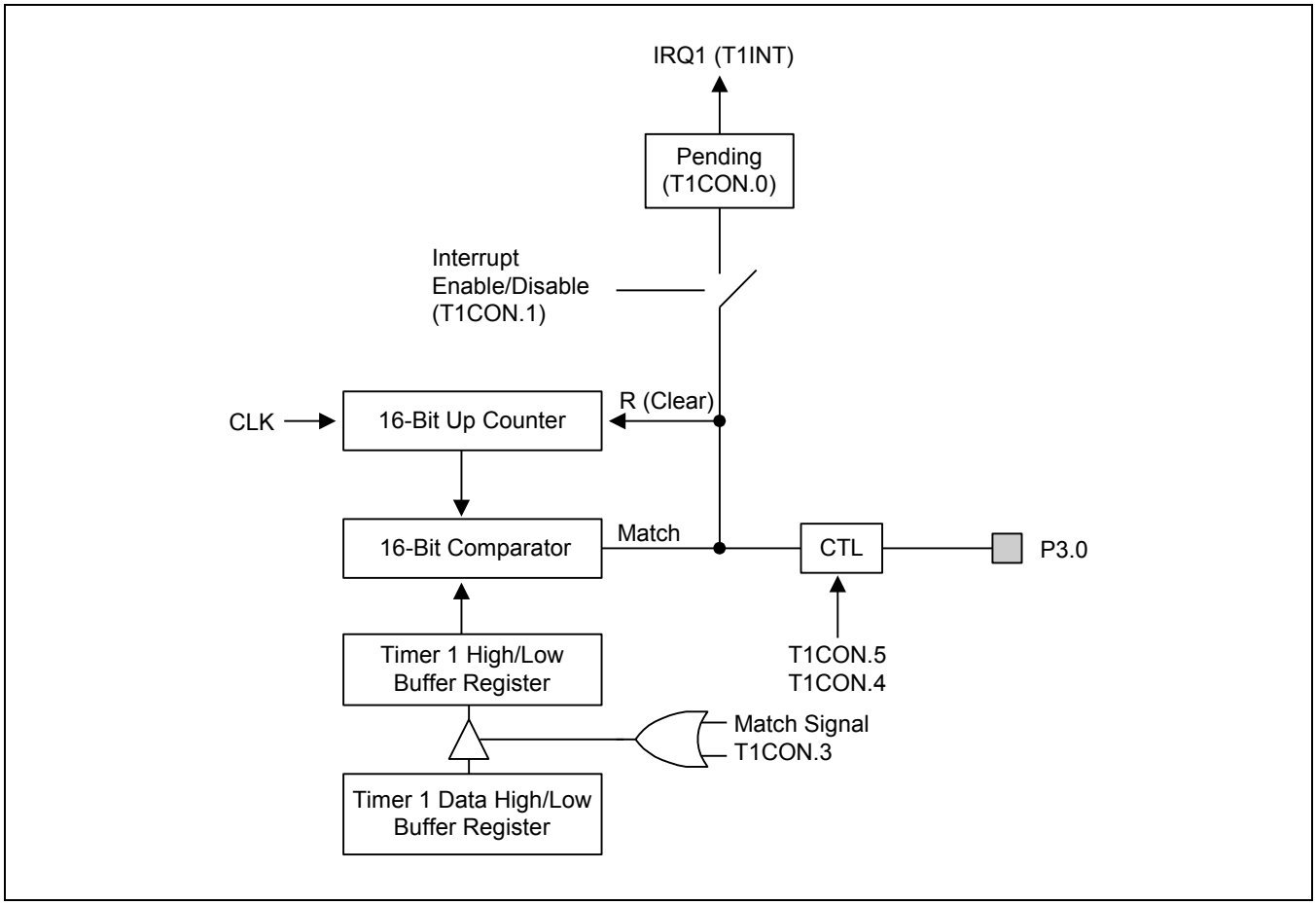

Figure 11-2 Simplified Timer 1 Function Diagram: Interval Timer Mode

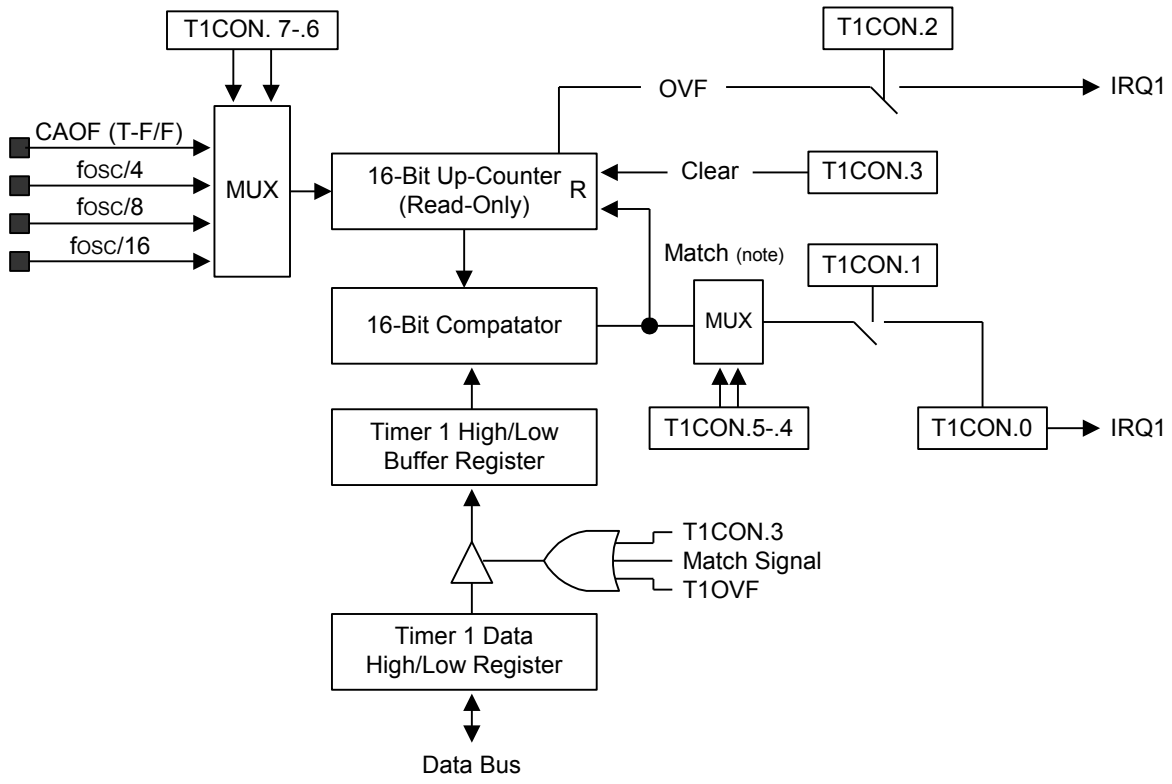

NOTE: Match signal is occurrd only in interval mode.

Figure 11-3 Timer 1 Block Diagram

11.1.4 Timer 1 Control Register (T1CON)

The Timer 1 control register, T1CON, is located in set 1, FAH, Bank0 and is read/write addressable.

T1CON contains control settings for the following T1 functions:

- Timer 1 input clock selection
- Timer 1 operating mode selection
- Timer 1 16-bit down counter clear
- Timer 1 overflow interrupt enable/disable
- Timer 1 match or capture interrupt enable/disable
- Timer 1 interrupt pending control (read for status, write to clear)

A reset operation clears T1CON to "00H", selecting fosc divided by 4 as the T1 clock, configuring Timer 1 as a normal interval Timer, and disabling the Timer 1 interrupts.

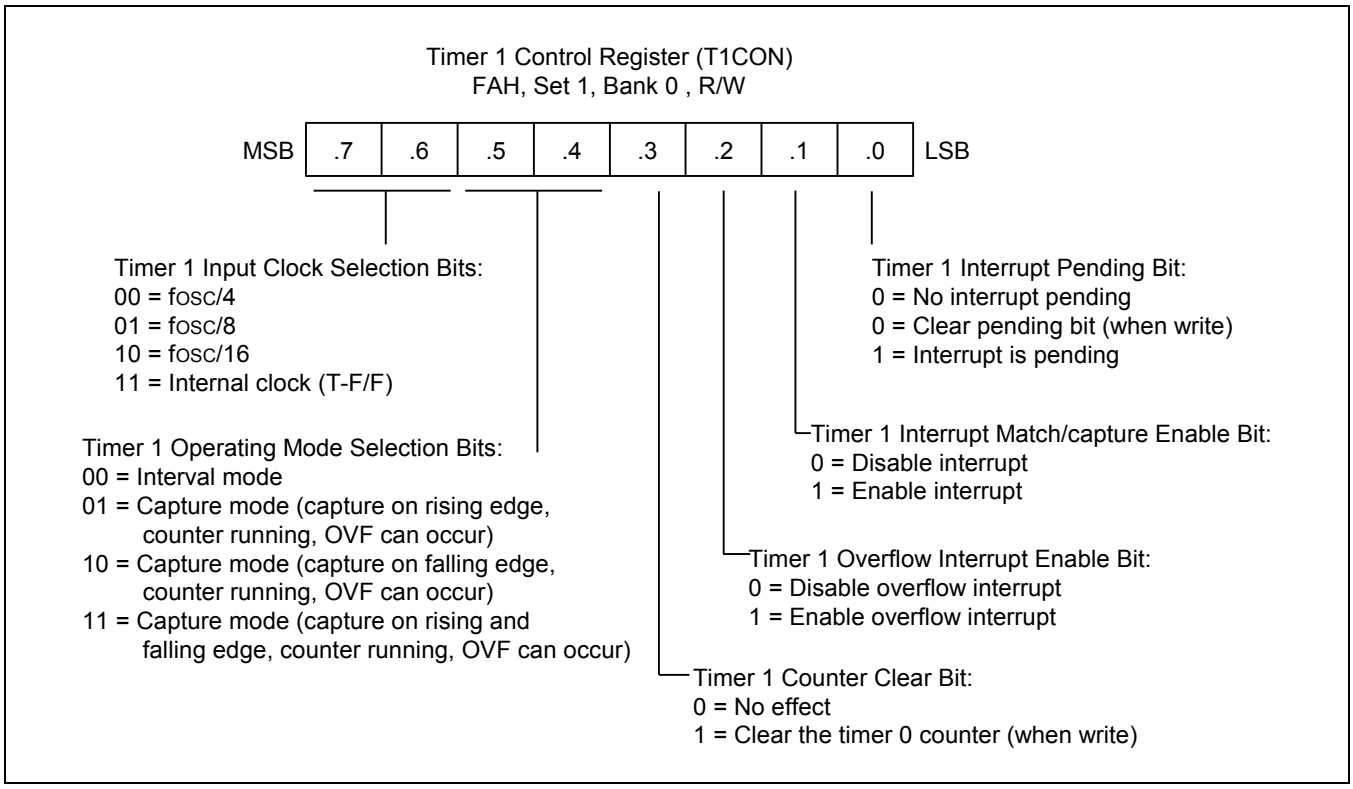

Figure 11-4 Timer 1 Control Register (T1CON)

Timer1 Counter High-byte Register (T1CNTH)
F6H, Set 1, Bank 0, R

MSB	.7	.6	.5	.4	.3	.2	.1	.0	LSB

Reset Value: 00H

Timer 1 Counter Low-byte Register (T1CNTL)
F7H, Set 1, Bank 0, R

MSB	.7	.6	.5	.4	.3	.2	.1	.0	LSB

Reset Value: 00H

Timer 1 Data High-byte Register (T1DATAH)
F8H, Set 1, Bank 0, R/W

MSB	.7	.6	.5	.4	.3	.2	.1	.0	LSB

Reset Value: FFH

Timer 1 Data Low-byte Register (T1DATAL)
F9H, Set 1, Bank 0, R/W

MSB	.7	.6	.5	.4	.3	.2	.1	.0	LSB

Reset Value: FFH

Figure 11-5 Timer 1 Registers (T1CNTH, T1CNTL, T1DATAH, T1DATAL)

12 Counter A

12.1 Overview

The S3F80Q5 microcontroller has one 8-bit counter called counter A. Counter A, which can be used to generate the carrier frequency, has the following components; (see *Figure 12-1*):

- Counter A control register, CACON
- 8-bit down counter with auto-reload function
- Two 8-bit reference data registers, CADATAH and CADATAL

Counter A has two functions:

- As a normal interval timer, generating a counter A interrupt (IRQ2, vector ECH) at programmed time intervals.
- To supply a clock source to the 16-bit timer/counter module, Timer 1, for generating the Timer 1 overflow interrupt.

NOTE: The CPU clock should be faster than count A clock.

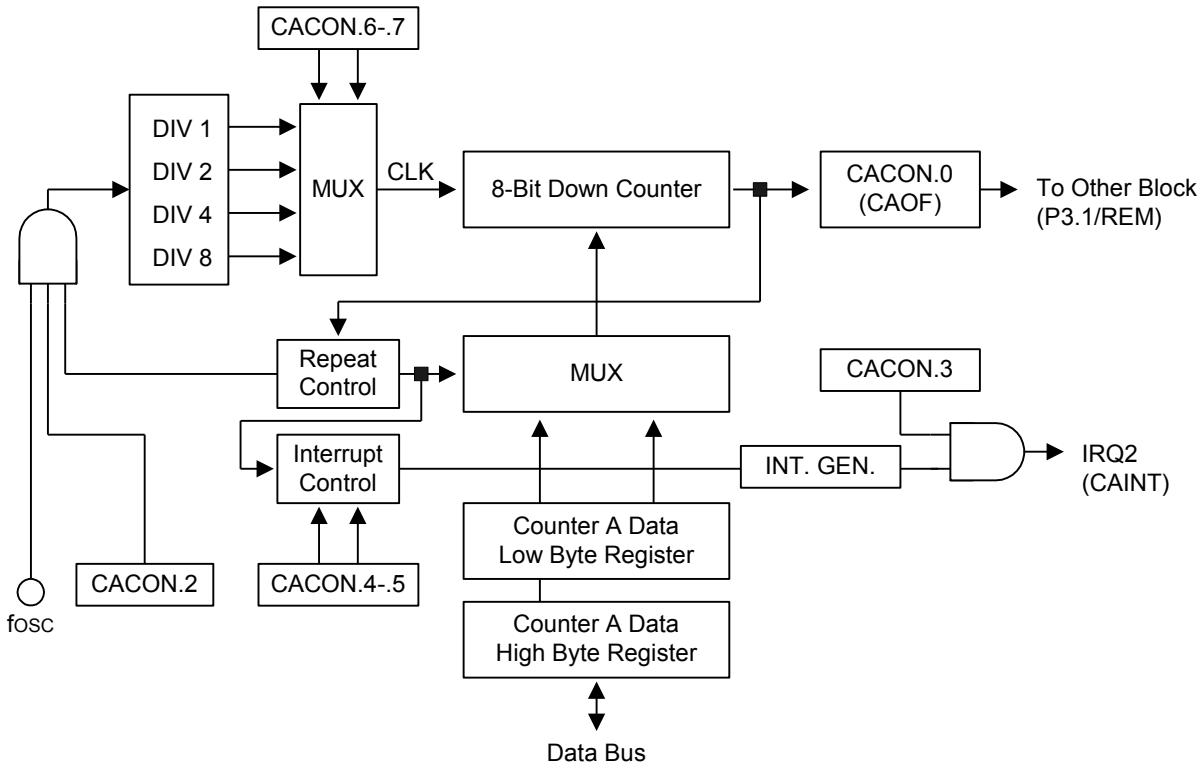

NOTE: The value of the CADATAL register is loaded into the 8-bit counter when the operation of the counter A stars. If a borrow occurs, the value of the CADATAH register is loaded into the 8-bit counter. However, if the next borrow occurs, the value of the CADATAL register is loaded into the 8-bit counter.

Figure 12-1 Counter A Block Diagram

12.1.1 Counter A Control Register (CACON)

The counter A control register, CACON, is located in F3H, set 1, bank 0, and is read/write addressable.

CACON contains control settings for the following functions; (see *Figure 12-2*):

- Counter A clock source selection
- Counter A interrupt enable/disable
- Counter A interrupt pending control (read for status, write to clear)
- Counter A interrupt time selection

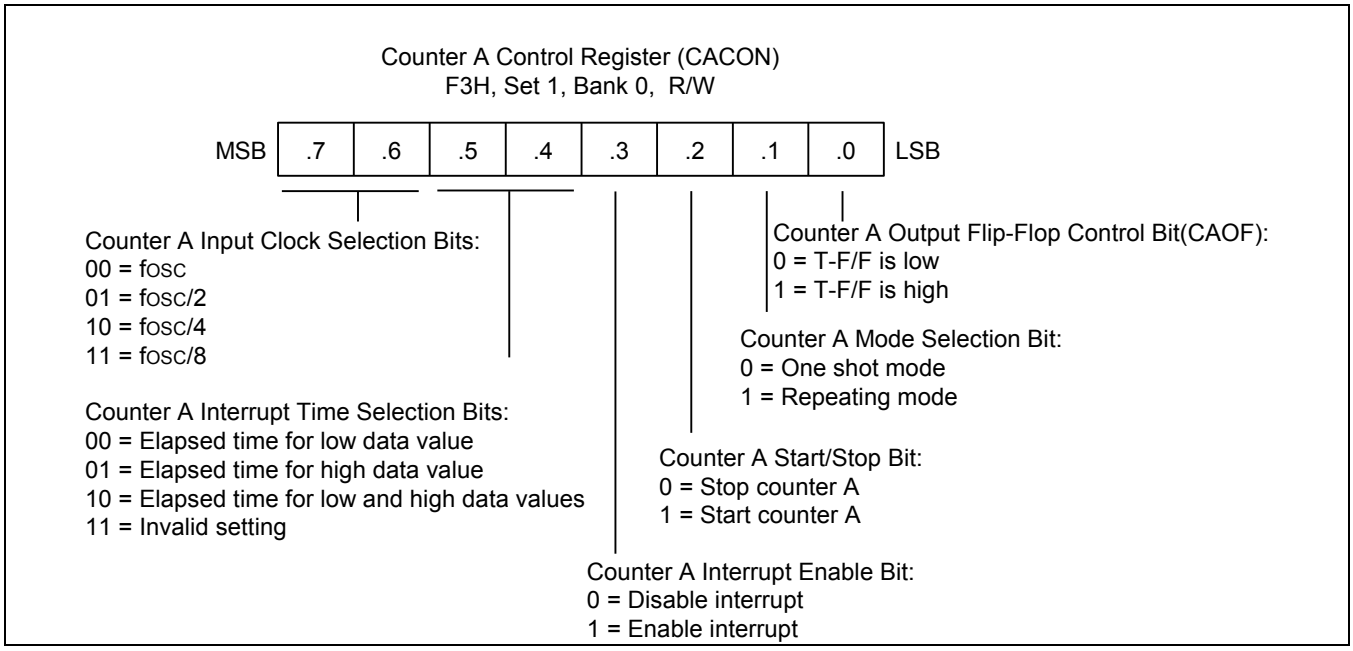

Figure 12-2 Counter A Control Register (CACON)

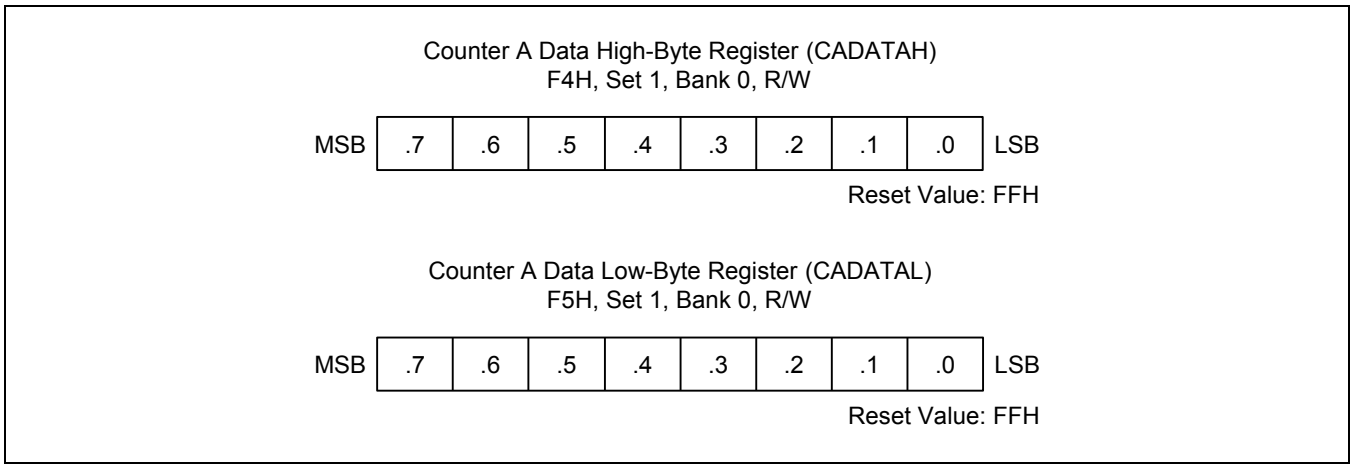

Figure 12-3 Counter A Registers

12.1.2 Counter A Pulse Width Calculations

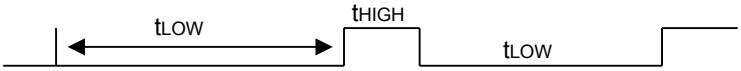

To generate the above repeated waveform consisted of low period time, t_{LOW}, and high period time, t_{HIGH}.

When CAOF = 0,

tLOW = (CADATAL + 2) × 1/Fx. 0H < CADATAL < 100H, where Fx = the selected clock.
tHIGH = (CADATAH + 2) × 1/Fx. 0H < CADATAH < 100H, where Fx = the selected clock.

When CAOF = 1,

tLOW = (CADATAH + 2) × 1/Fx. 0H < CADATAH < 100H, where Fx = the selected clock.
tHIGH = (CADATAL + 2) × 1/Fx. 0H < CADATAL < 100H, where Fx = the selected clock.

To make tLOW = 24 μs and tHIGH = 15 μs. fOSC = 4 MHz, FX = 4 MHz/4 = 1 MHz

[Method 1]
When CAOF = 0,

tLOW = 24 μs = (CADATAL + 2)/FX = (CADATAL + 2) × 1 μs, CADATAL = 22.
tHIGH = 15 μs = (CADATAH + 2)/FX = (CADATAH + 2) × 1 μs, CADATAH = 13.

[Method 2]
When CAOF = 1,

tHIGH = 15 μs = (CADATAL + 2)/FX = (CADATAL + 2) × 1 μs, CADATAL = 13.
tLOW = 24 μs = (CADATAH + 2)/FX = (CADATAH + 2) × 1 μs, CADATAH = 22.

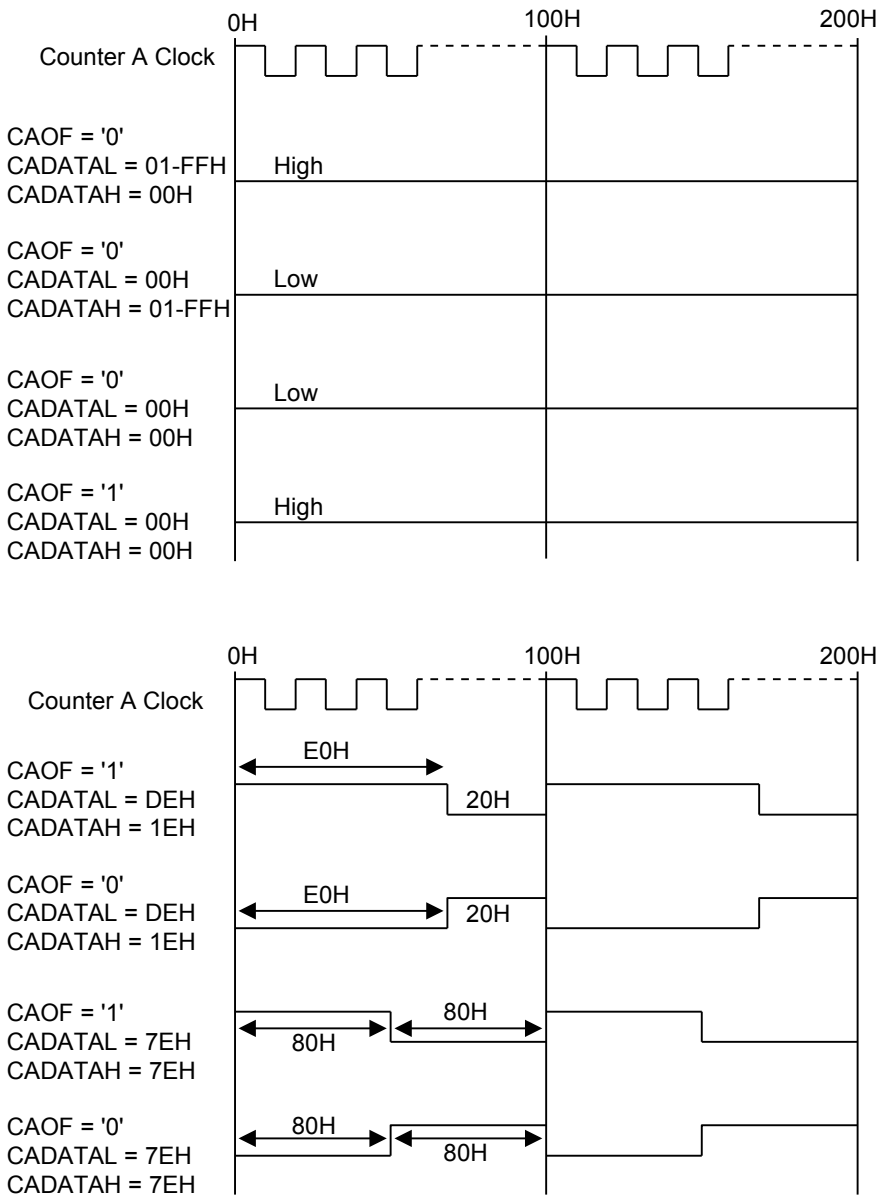

Figure 12-4 Counter A Output Flip-Flop Waveforms in Repeat Mode

12.1.3 To Generate 38 kHz, 1/3 Duty Signal through P3.1

This example sets Counter A to the repeat mode, sets the oscillation frequency as the Counter A clock source, and CADATAH and CADATAL to make a 38 kHz, 1/3 Duty carrier frequency.

The program parameters are:

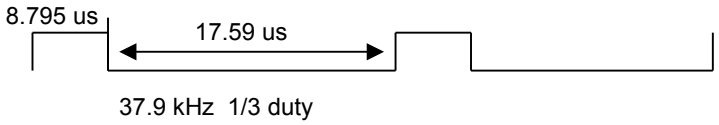

- Counter A is used in repeat mode
- Oscillation frequency is 4 MHz (0.25 μs)
- CADATAH = 8.795 μs/0.25 μs = 35.18
  CADATAL = 17.59 μs/0.25 μs = 70.36
- Set P3.1 C-MOS push-pull output and CAOF mode.

Example 12-1 To Generate 38 kHz, 1/3 Duty Signal through P3.1

```
            ORG     0100H                       ; Reset address
START:      DI
            •
            •
            •
            LD      CADATAL,#(70-2)             ; Set 17.5 ms
            LD      CADATAH,#(35-2)             ; Set 8.75 ms

            LD      P3CON,#11110010B            ; Set P3 to C-MOS push-pull output.
                                                ; Set P3.1 to REM output

            LD      CACON,#00000110B            ; Clock Source →  Fosc

                                                ; Disable Counter A interrupt.
                                                ; Select repeat mode for Counter A.
                                                ; Start Counter A operation.
                                                ; Set Counter A Output Flip-flop(CAOF) high.

            LD      P3,#80H                     ; Set P3.7(Carrier On/Off) to high.
                                                ; This command generates 38 kHz, 1/3 duty pulse
                                                  signal through P3.1
            •
            •
            •
```

12.1.4 To Generate a One-Pulse Signal through P3.1

This example sets Counter A to the one shot mode, sets the oscillation frequency as the Counter A clock source, and CADATAH and CADATAL to make a 40 μs width pulse.

The program parameters are:

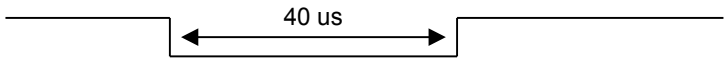

- Counter A is used in one-shot mode
- Oscillation frequency is 4 MHz (1 clock = 0.25 μs)
- CADATAH = 40 μs/0.25 μs = 160
  CADATAL = 1
- Set P3.1 C-MOS push-pull output and CAOF mode.

Example 12-2 To Generate a One-Pulse Signal through P3.1

```
            ORG     0100H                       ; Reset address
START:      DI

            .
            .

            LD      CADATAH,#(160-2)            ; Set 40 ms
            LD      CADATAL,#1                  ; Set any value except 00H

            LD      P3CON,#11110010B            ; Set P3 to C-MOS push-pull output.
                                                ; Set P3.1 to REM output

            LD      CACON,#00000001B            ; Clock Source  →   Fosc
                                                ; Disable Counter A interrupt.
                                                ; Select one shot mode for Counter A.
                                                ; Stop Counter A operation.
                                                ; Set Counter A Output Flip-Flop (CAOF) high
            LD      P3,#80H                     ; Set P3.7(Carrier On/Off) to high.

            .
            .
            .

Pulse_out:  LD      CACON,#00000101B            ; Start Counter A operation
                                                ; to make the pulse at  this point.
                                                ; After the instruction is executed, 0.75 ms is
                                                  required
                                                ; before the falling edge of the pulse starts.
            .
            .
            .
```

13 Timer 2

13.1 Overview

The S3F80Q5 microcontroller has a 16-bit timer/counter called Timer 2 (T2). For universal remote controller applications, timer 2 can be used to generate the envelope pattern for the remote controller signal.

Timer 2 has the following components:

- One control register, T2CON (E8H, set 1, Bank1, R/W)
- Two 8-bit counter registers, T2CNTH and T2CNTL (E4H and E5H, Set1, Bank1, Read only)
- Two 8-bit reference data registers, T2DATAH and T2DATAL (E6H and E7H, set 1, Bank1, R/W)
- One 16-bit comparator

You can select one of the following clock sources as the timer 2 clock:

- Oscillator frequency (f_{OSC}) divided by 4, 8, or 16
- Internal clock input from the counter A module (counter A flip/flop output)

You can use Timer 2 in three ways:

- As a normal free run counter, generating a timer 2 overflow interrupt (IRQ3, vector F0H) at programmed time intervals.
- To generate a timer 2 match interrupt (IRQ3, vector F2H) when the 16-bit timer 2 count value matches the 16-bit value written to the reference data registers.
- To generate a timer 2 capture interrupt (IRQ3, vector F2H) when a triggering condition exists at the P3.0 (You can select a rising edge, a falling edge, or both edges as the trigger).

In the S3F80Q5 interrupt structure, the timer 2 overflow interrupt has higher priority than the timer 2 match or capture interrupt.

NOTE: The CPU clock should be faster than timer 2 clock.

13.1.1 Timer 2 Overflow Interrupt

Timer 2 can be programmed to generate an overflow interrupt (IRQ3, F0H) whenever an overflow occurs in the 16-bit up counter. When you set the timer 2 overflow interrupt enable bit, T2CON.2, to "1", the overflow interrupt is generated each time the 16-bit up counter reaches "FFFFH". After the interrupt request is generated, the counter value is automatically cleared to "00H" and up counting resumes. By writing a "1" to T2CON.3, you can clear/reset the 16-bit counter value at any time during program operation.

13.1.2 Timer 2 Capture Interrupt

Timer 2 can be used to generate a capture interrupt (IRQ3, vector F2H) whenever a triggering condition is detected at the P3.0 pin for 32 pin package and P3.3 pin for 44 pin package. The T2CON.5 and T2CON.4 bit-pair setting is used to select the trigger condition for capture mode operation: rising edges, falling edges, or both signal edges.

In capture mode, program software can poll the timer 2 match/capture interrupt pending bit, T2CON.0, to detect when a timer 2 capture interrupt pending condition exists (T2CON.0 = "1"). When the interrupt request is acknowledged by the CPU and the service routine starts, the interrupt service routine for vector F2H must clear the interrupt pending condition by writing a "0" to T2CON.0.

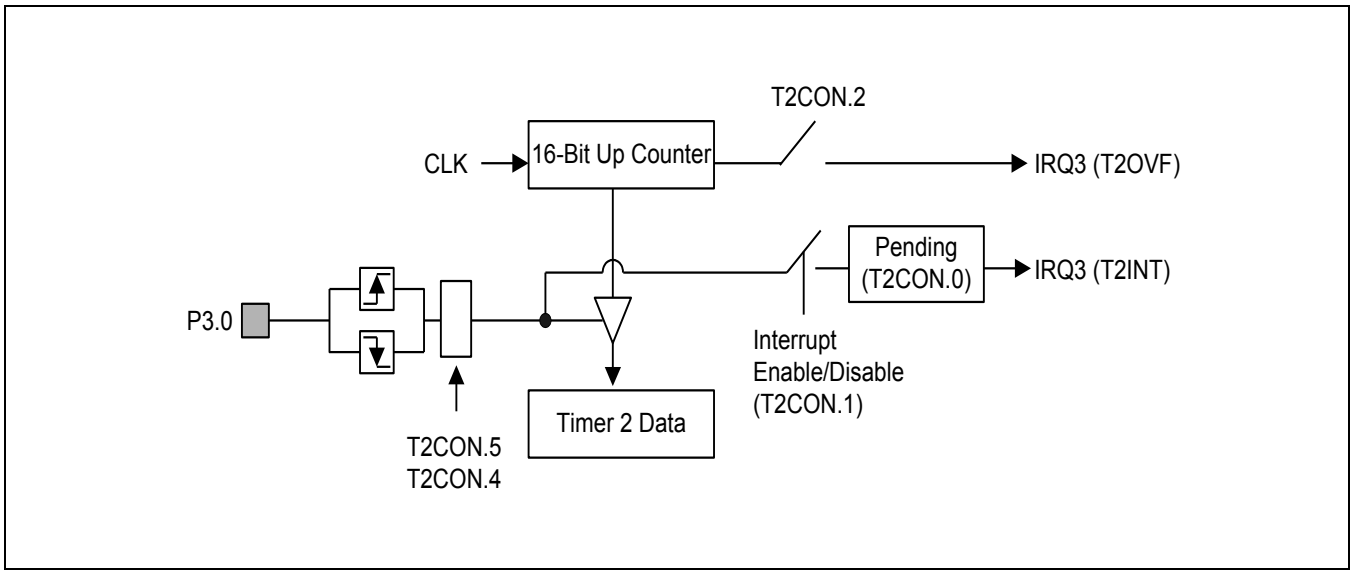

Figure 13-1 Simplified Timer 2 Function Diagram: Capture Mode

13.1.3 Timer 2 Match interrupt

Timer 2 can also be used to generate a match interrupt (IRQ3, vector F2H) whenever the 16-bit counter value matches the value that is written to the timer 2 reference data registers, T2DATAH and T2DATAL. When a match condition is detected by the 16-bit comparator, the match interrupt is generated, the counter value is cleared, and up counting resumes from "00H".

In match mode, program software can poll the timer 2 match/capture interrupt pending bit, T2CON.0, to detect when a timer 2 match interrupt pending condition exists (T2CON.0 = "1"). When the interrupt request is acknowledged by the CPU and the service routine starts, the interrupt service routine for vector F2H must clear the interrupt pending condition by writing a "0" to T2CON.0.

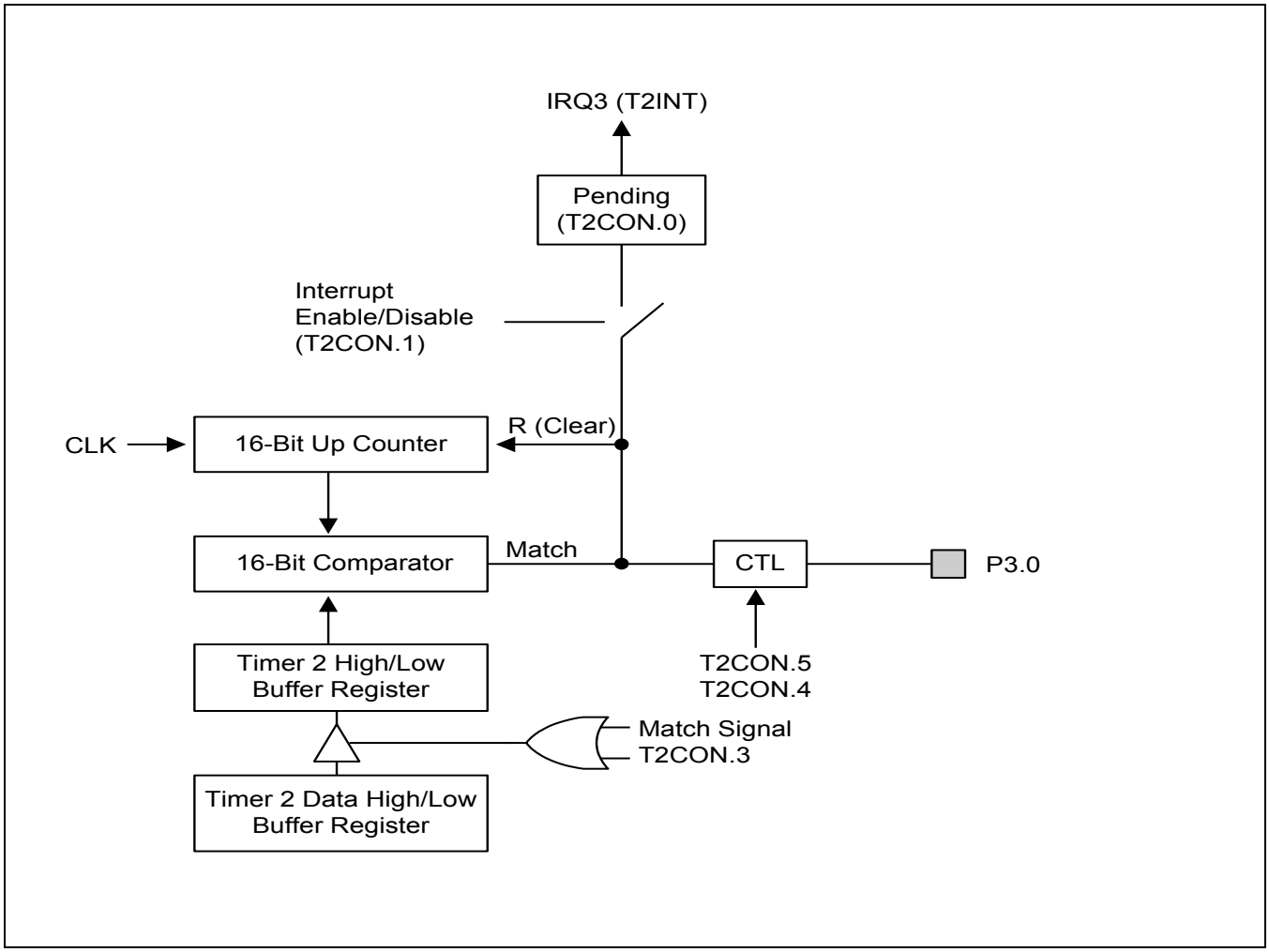

Figure 13-2 Simplified Timer 2 Function Diagram: Interval Timer Mode

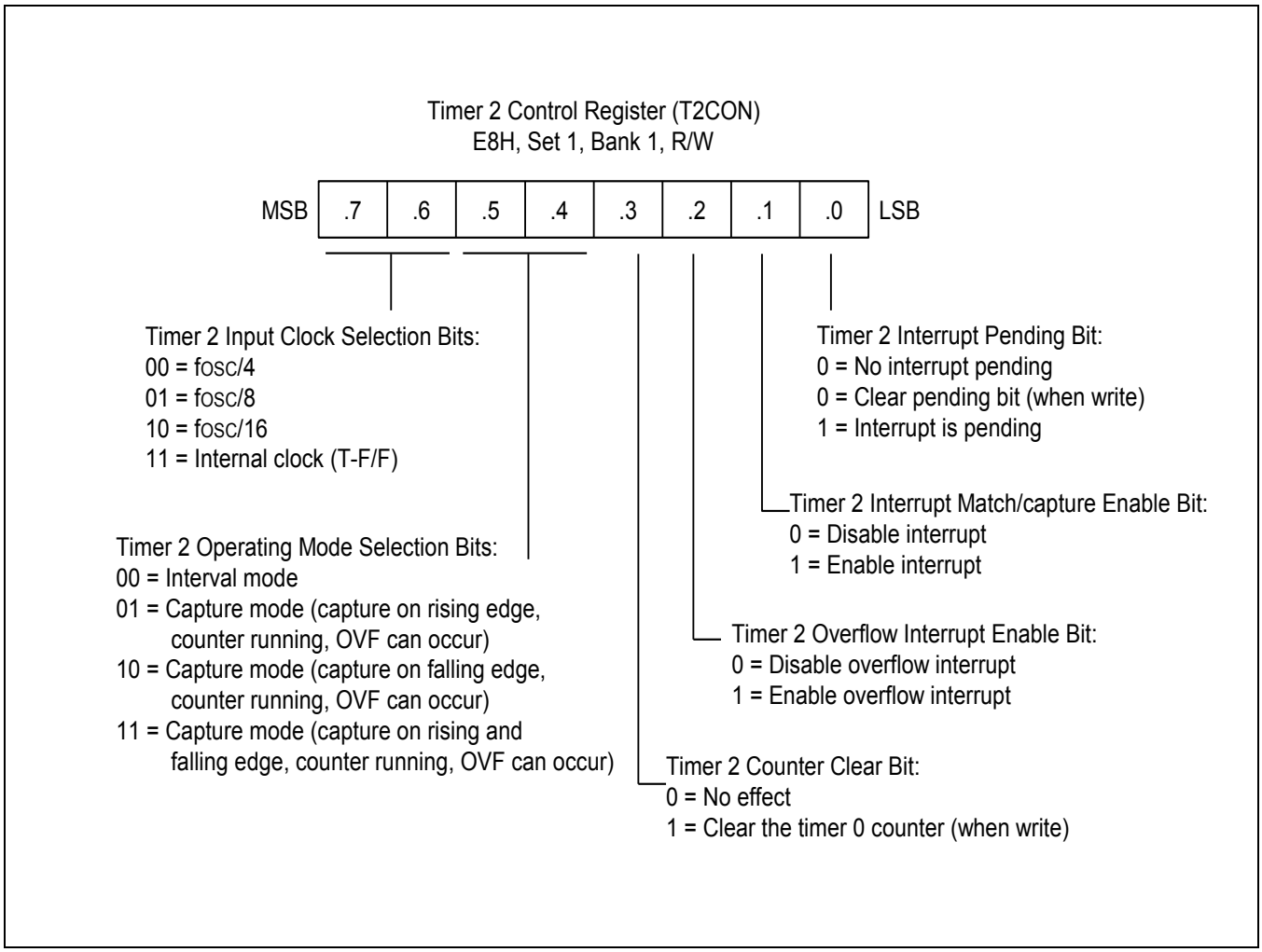

Figure 13-3 Timer 2 Block Diagram

13.1.4 Timer 2 Control Register (T2CON)

The timer 2 control register, T2CON, is located in address E8H, bank1, set 1 and is read/write addressable.

T2CON contains control settings for the following T2 functions:

- Timer 2 input clock selection
- Timer 2 operating mode selection
- Timer 2 16-bit down counter clear
- Timer 2 overflow interrupt enable/disable
- Timer 2 match or capture interrupt enable/disable
- Timer 2 interrupt pending control (read for status, write to clear)

A reset operation clears T2CON to 00H, selecting f_{OSC} divided by 4 as the T2 clock, configuring timer 2 as a normal interval timer, and disabling the timer 2 interrupts.

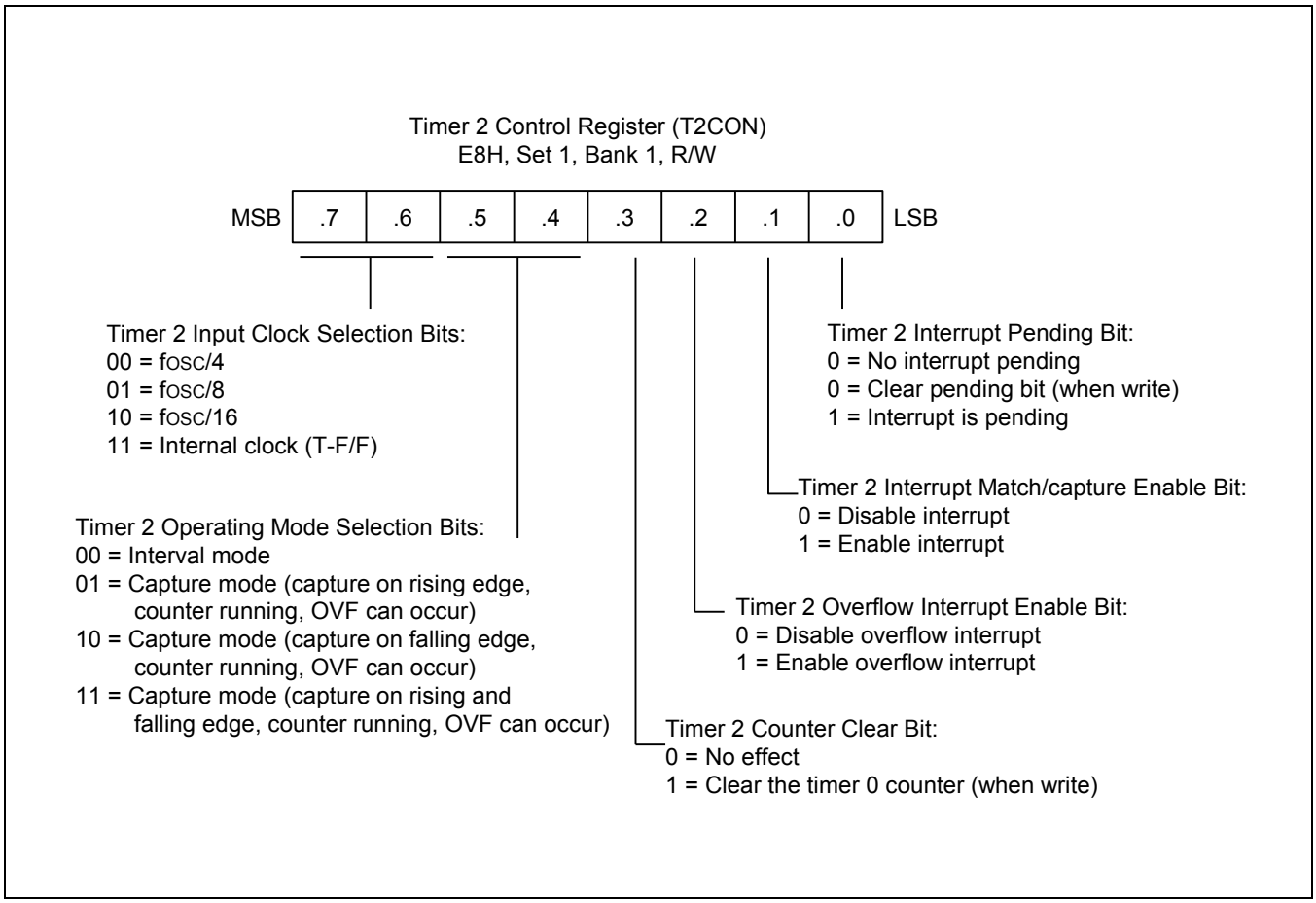

Figure 13-4 Timer 2 Control Register (T2CON)

Timer2 Counter High-Byte Register (T2CNTH)
E4H , Set 1, Bank 1, Read-only

MSB	.7	.6	.5	.4	.3	.2	.1	.0	LSB

Reset Value: 00H

Timer 2 Counter Low-Byte Register (T2CNTL)
E5H , Set 1, Bank 1, Read-only

MSB	.7	.6	.5	.4	.3	.2	.1	.0	LSB

Reset Value: 00H

Timer 2 Data High-Byte Register (T2DATAH)
E6H , Set 1, Bank 1, R/W

MSB	.7	.6	.5	.4	.3	.2	.1	.0	LSB

Reset Value: FFH

Timer 2 Data Low-Byte Register (T2DATAL)
E7H , Set 1, Bank 1, R/W

MSB	.7	.6	.5	.4	.3	.2	.1	.0	LSB

Reset Value: FFH

Figure 13-5 Timer 2 Registers (T2CNTH, T2CNTL, T2DATAH, T2DATAL)

14 Embedded Flash Memory Interface

14.1 Overview

The S3F80Q5 has an on-chip Flash memory internally instead of masked ROM. The Flash memory is accessed by instruction "LDC". This is a sector erasable and a byte programmable Flash. User can program the data in a Flash memory area any time you want.

The S3F80Q5's embedded 18KB memory has two operating features as below:

- User Program Mode
- Tool Program Mode: Refer to Chapter 18 Flash MCU.

14.2 Flash ROM Configuration

The S3F80Q5 Flash memory consists of 144 sectors. Each sector consists of 128 Bytes. So, the total size of Flash memory is 128 × 144 Bytes (18 KB). User can erase the Flash memory by a sector unit at a time and write the data into the Flash memory by a byte unit at a time.

- 18KB Internal Flash memory
- Sector size: 128 Bytes
- 10 years data retention
- Fast programming Time:
  - Sector Erase: 4 ms (min)
  - Byte Program: 20 μs (min)
- Byte programmable
- User programmable by "LDC" instruction
- Sector (128 Bytes) erase available
- External serial programming support
- Endurance: 10,000 Erase/Program cycles (min.)
- Expandable OBPTM (On Board Program)

14.3 User Program Mode

This mode supports sector erase, byte programming, byte read and one protection mode (Hard Lock Protection). The S3F80Q5 has the internal pumping circuit to generate high voltage. Therefore, 12.5 V into Vpp (test) pin is not needed. To program a Flash memory in this mode several control registers will be used.

There are four kind functions in user program mode – programming, reading, sector erase, and one protection mode (hard lock protection).

c

14.3.1 ISP™ (On-Board Programming) SECTOR

ISP™ sectors located in program memory area can store On Board Program Software (boot program code for upgrading application code by interfacing with I/O port pin). The ISP™ sectors can't be erased or programmed by "LDC" instruction for the safety of On Board Program Software.

The ISP sectors are available only when the ISP enable/disable bit is set 0, that is, enable ISP at the Smart Option. If you don't like to use ISP sector, this area can be used as a normal program memory (can be erased or programmed by "LDC" instruction) by setting ISP disable bit ("1") at the Smart Option. Even if ISP sector is selected, ISP sector can be erased or programmed in the tool program mode by serial programming tools.

The size of ISP sector can be varied by settings of Smart Option (refer to Figure 2-2 and *Figure 14-2*). You can choose appropriate ISP sector size according to the size of On Board Program Software.

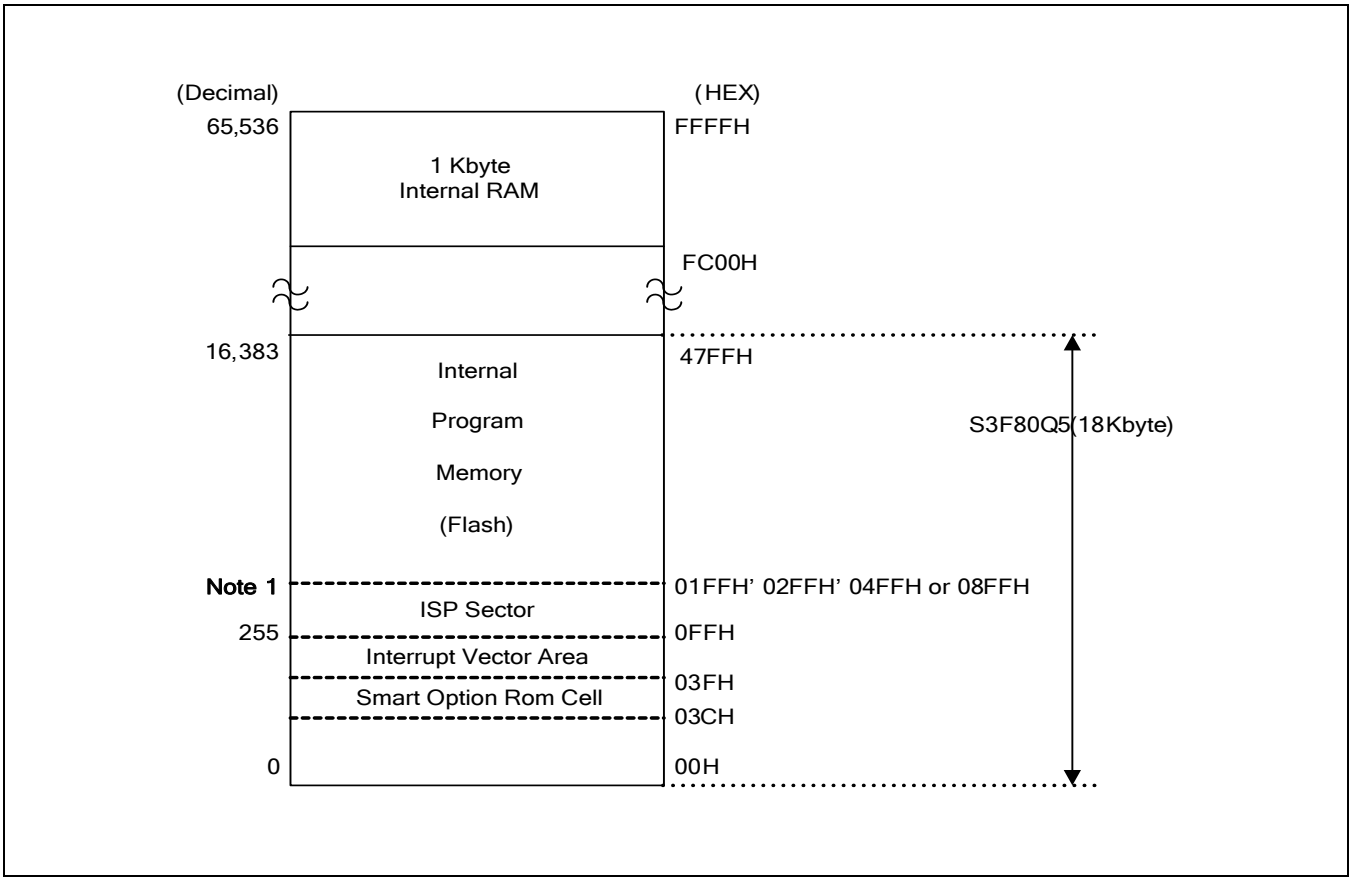

Figure 14-1 Program Memory Address Space

14.3.2 Smart Option

Smart Option is the program memory option for starting condition of the chip. The program memory addresses used by Smart Option are from 003CH to 003FH. The S3F80Q5 only use 003EH and 003FH. User can write any value in the not used addresses (003CH and 003DH). The default value of Smart Option bits in program memory is 0FFH (Normal reset vector address 100H, ISP protection disable). Before execution the program memory code, user can set the Smart Option bits according to the hardware option for user to want to select.

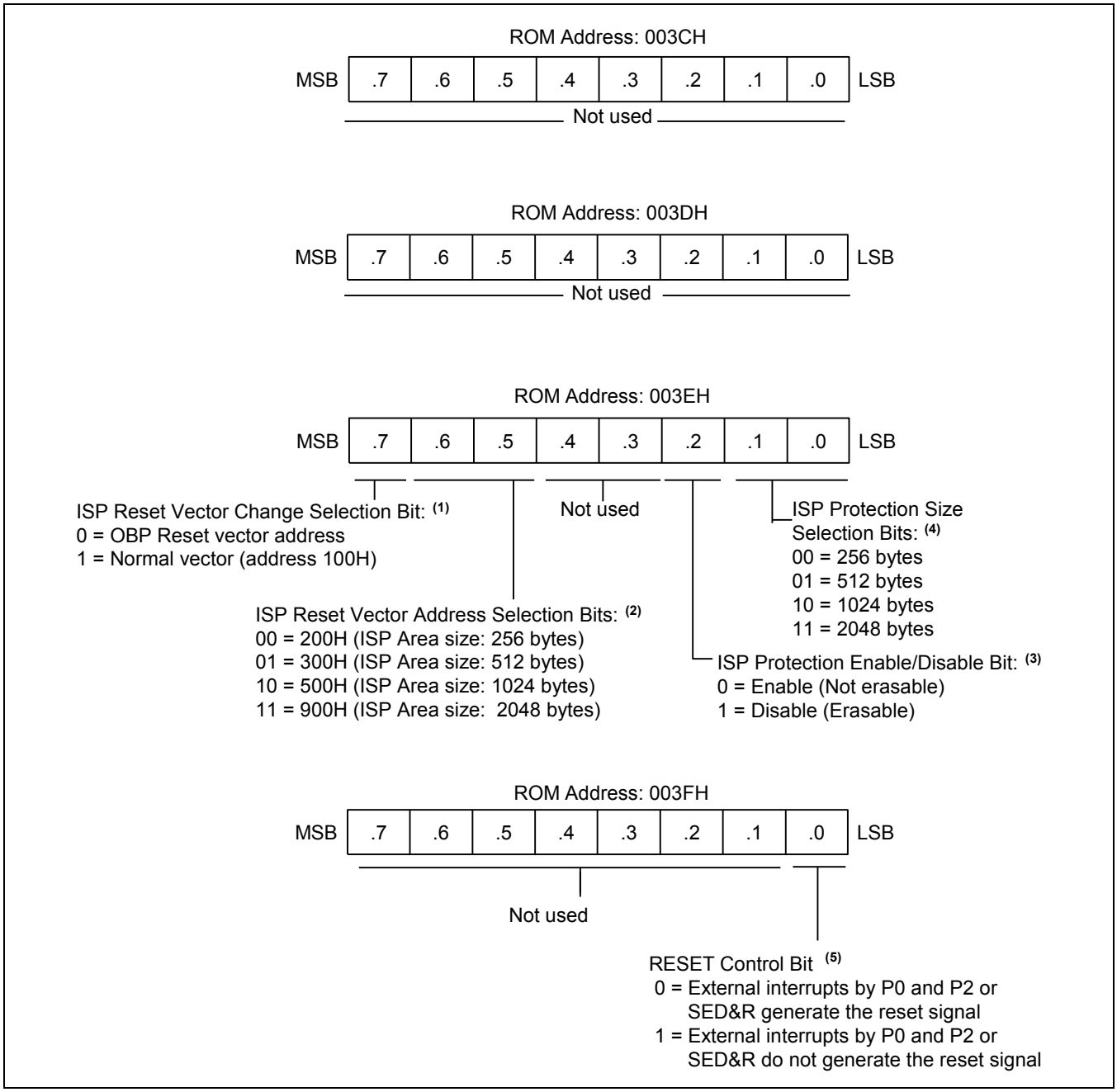

Figure 14-2 Smart Option

NOTE:

1. By setting ISP Reset Vector Change Selection Bit (3EH.7) to "0", user can have the available ISP area.
   If ISP Reset Vector Change Selection Bit (3EH.7) is "1", 3EH.6 and 3EH.5 are meaningless.
2. If ISP Reset Vector Change Selection Bit (3EH.7) is ‘0’, user must change ISP reset vector address from 0100H to some address which user want to set reset address (0200H, 0300H, 0500H or 0900H).
   If the reset vector address is 0200H, the ISP area can be assigned from 0100H to 01FFH (256 bytes).
   If 0300H, the ISP area can be assigned from 0100H to 02FFH (512 bytes). If 0500H, the ISP area can be from 0100H to 04FFH (1024 bytes). If 0900H, the ISP area can be from 0100H to 08FFH (2048 bytes).
3. If ISP Protection Enable/Disable Bit is "0", user can't erase or program the ISP area selected by 3EH.1 and 3EH.0 in Flash memory.
4. User can select suitable ISP protection size by 3EH.1 and 3EH.0. If ISP Protection Enable/Disable Bit (3EH.2) is "1", 3EH.1 and 3EH.0 are meaningless.

Table 14-1 ISP Sector Size

Smart Option (003EH) ISP Size Selection Bit			Area of ISP Sector	ISP Sector Size
Bit 2	Bit 1	Bit 0		
1	x	x	0	0
0	0	0	100H – 1FFH (256 Bytes)	256 Bytes
0	0	1	100H – 2FFH (512 Bytes)	512 Bytes
0	1	0	100H – 4FFH (1024 Bytes)	1024 Bytes
0	1	1	100H – 8FFH (2048 Bytes)	2048 Bytes

NOTE: The area of the ISP sector selected by Smart Option bit (3EH.2 – 3EH.0) can’t be erased and programmed by "LDC" instruction in user program mode.

14.3.3 ISP Reset Vector and ISP Sector Size

If you use ISP sectors by setting the ISP enable/disable bit to "0" and the reset vector selection bit to "0" at the Smart Option, you can choose the reset vector address of CPU as shown in *Table 14-2* by setting the ISP reset vector address selection bits. (Refer to Figure 2-2 Smart Option).

Table 14-2 Reset Vector Address

Smart Option (003EH) ISP Reset Vector Address Selection Bit			Reset Vector Address after POR	Usable Area for ISP Sector	ISP Sector Size
Bit 7	Bit 6	Bit 5			
1	x	x	0100H	0	0
0	0	0	0200H	100H – 1FFH	256 Bytes
0	0	1	0300H	100H – 2FFH	512 Bytes
0	1	0	0500H	100H – 4FFH	1024 Bytes
0	1	1	0900H	100H – 8FFH	2048 Bytes

NOTE: The selection of the ISP reset vector address by Smart Option (003EH.7 – 003EH.5) is not dependent of the selection of ISP sector size by Smart Option (003EH.2 – 003EH.0).

14.4 Flash Memory Control Registers (User Program Mode)

14.4.1 Flash Memory Control Register (FMCON)

FMCON register is available only in user program mode to select the Flash memory operation mode; sector erase, byte programming, and to make the Flash memory into a hard lock protection.

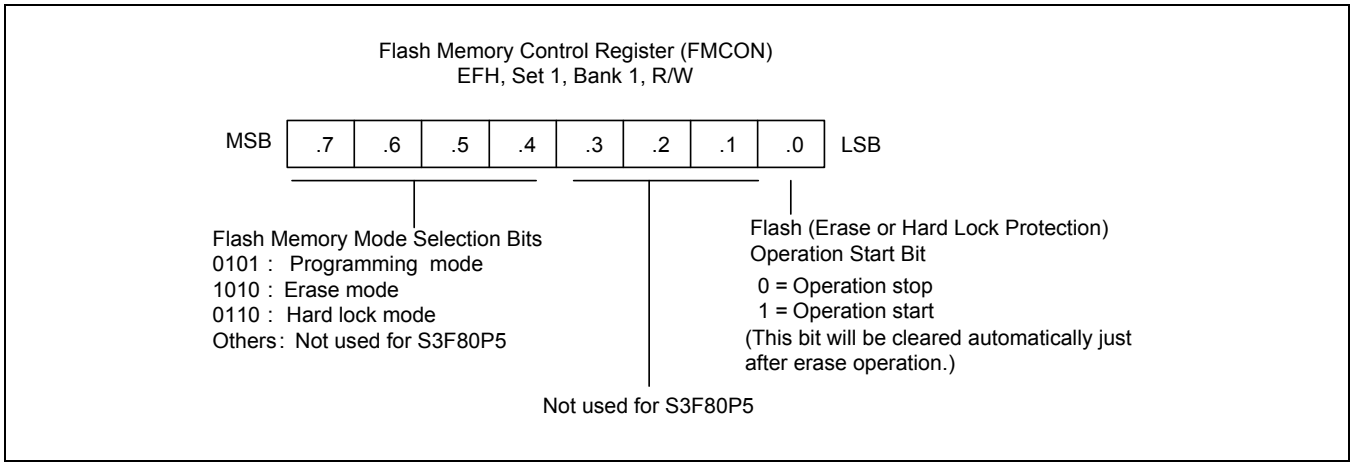

Figure 14-3 Flash Memory Control Register (FMCON)

The bit 0 of FMCON register (FMCON.0) is a bit for the operation start of Erase and Hard Lock Protection. Therefore, operation of Erase and Hard Lock Protection is activated when you set FMCON.0 to "1". If you write FMCON.0 to 1 for erasing, CPU is stopped automatically for erasing time (min.10 ms). After erasing time, CPU is restarted automatically. When you read or program a byte data from or into Flash memory, this bit is not needed to manipulate.

14.4.2 Flash Memory User Programming Enable Register (FMUSR)

The FMUSR register is used for a safe operation of the Flash memory. This register will protect undesired erase or program operation from malfunctioning of CPU caused by an electrical noise. After reset, the user-programming mode is disabled, because the value of FMUSR is "00000000B" by reset operation. If necessary to operate the Flash memory, you can use the user programming mode by setting the value of FMUSR to "10100101B". The other value of "10100101B", user program mode is disabled.

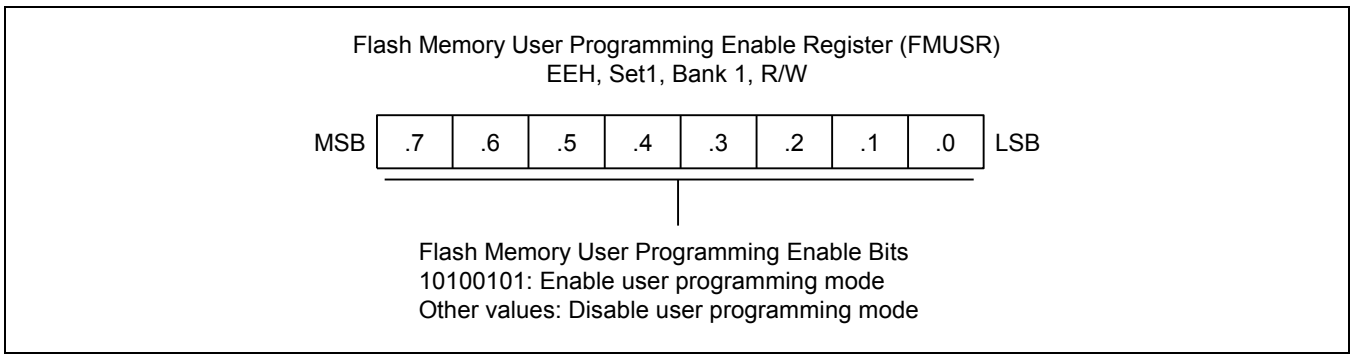

Figure 14-4 Flash Memory User Programming Enable Register (FMUSR)

14.4.3 Flash Memory sector Address Registers

There are two sector address registers for the erase or programming Flash memory. The FMSECL (Flash Memory Sector Address Register Low Byte) indicates the low byte of sector address and FMSECH (Flash Memory Address Sector Register High Byte) indicates the high byte of sector address.

One sector consists of 128-bytes. Each sector's address starts XX00H or XX80H, that is, a base address of sector is XX00H or XX80H. So bit .6–.0 of FMSECL don't mean whether the value is "1" or "0". We recommend that it is the simplest way to load the sector base address into FMSECH and FMSECL register. When programming the Flash memory, user should program after loading a sector base address, which is located in the destination address to write data into FMSECH and FMSECL register. If the next operation is also to write one byte data, user should check whether next destination address is located in the same sector or not. In case of other sectors, user should load sector address to FMSECH and FMSECL Register according to the sector. (Refer to *Example 14-2*)

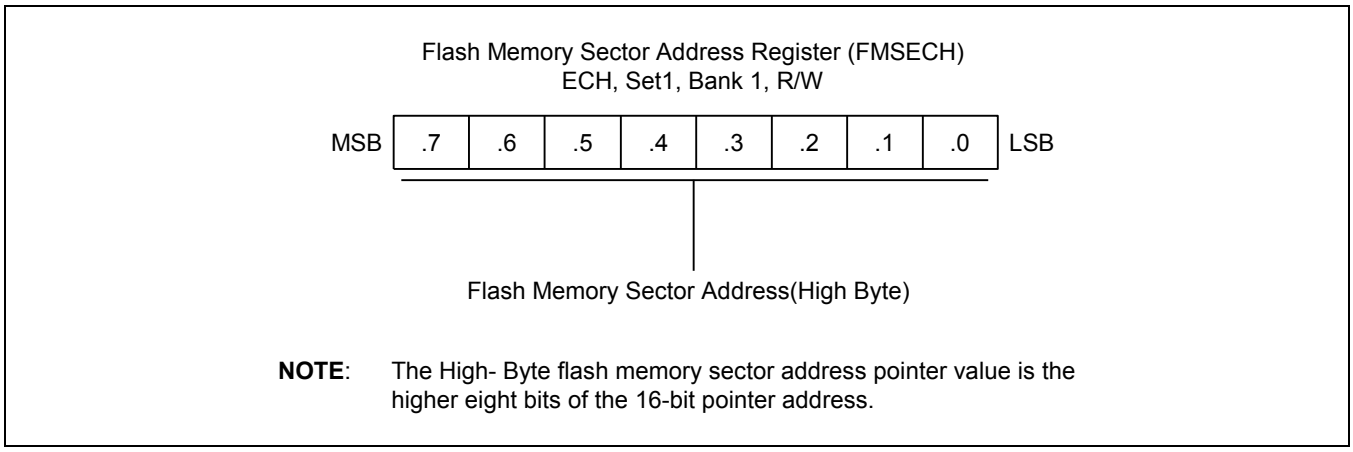

Figure 14-5 Flash Memory Sector Address Register (FMSECH)

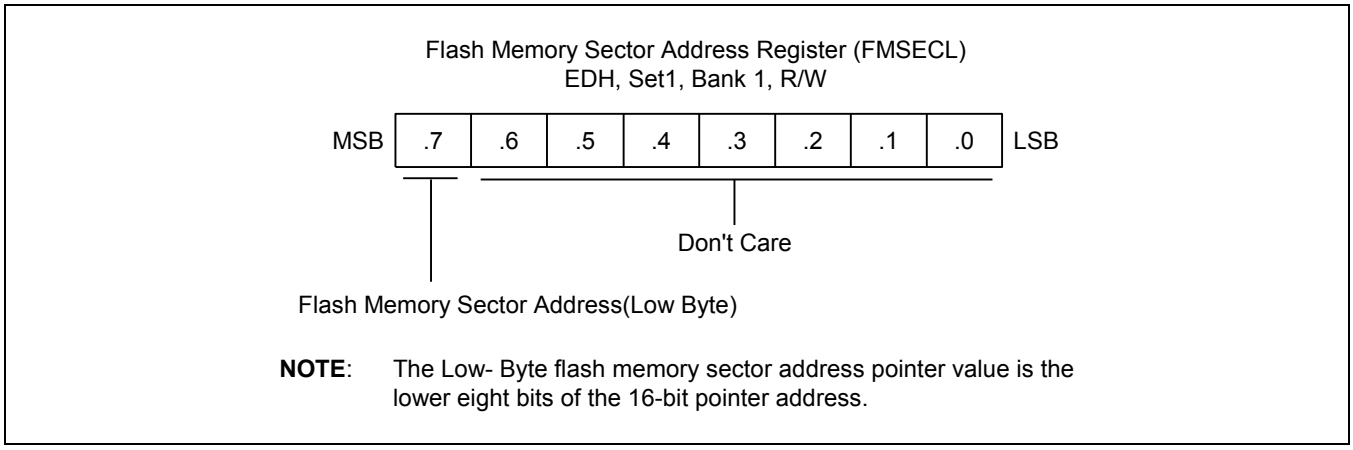

Figure 14-6 Flash Memory Sector Address Register (FMSECL)

14.4.4 Sector Erase

User can erase a Flash memory partially by using sector erase function only in user program mode. The only unit of Flash memory to be erased in the user program mode is a sector.

The program memory of S3F80Q5, 18KB Flash memory, is divided into 144 sectors. Every sector has all 128 byte sizes. So the sector to be located destination address should be erased first to program a new data (one byte) into Flash memory. Minimum 10 ms delay time for the erase is required after setting sector address and triggering erase start bit (FMCON.0). Sector erase is not supported in tool program modes (MDS mode tool or programming tool).

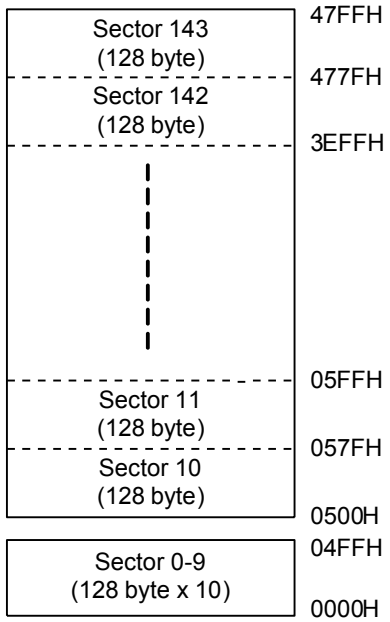

Figure 14-7 Sector Configurations in User Program Mode

The Sector Erase Procedure in User Program Mode

1. Set Flash Memory User Programming Enable Register (FMUSR) to "10100101B".
2. Set Flash Memory Sector Address Register (FMSECH and FMSECL).
3. Set Flash Memory Control Register (FMCON) to "10100001B".
4. Set Flash Memory User Programming Enable Register (FMUSR) to "00000000B".

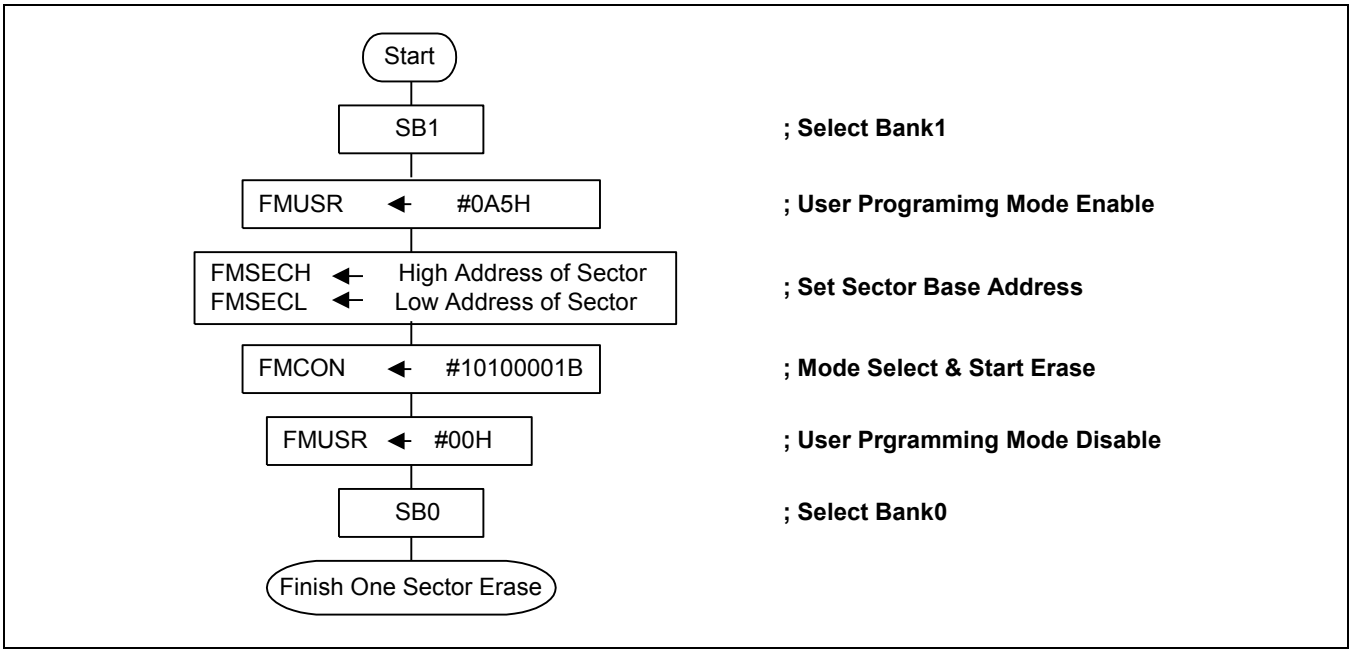

Figure 14-8 Sector Erase Flowchart in User Program Mode

NOTE:

1. If user erases a sector selected by Flash Memory Sector Address Register FMSECH and FMSECL, FMUSR should be enabled just before starting sector erase operation. And to erase a sector, Flash Operation Start Bit of FMCON register is written from operation stop "0" to operation start "1". That bit will be cleared automatically just after the corresponding operation completed. In other words, when S3F80Q5 is in the condition that Flash memory user programming enable bits is enabled and executes start operation of sector erase, it will get the result of erasing selected sector as user's a purpose and Flash Operation Start Bit of FMCON register is also clear automatically.
2. If user executes sector erase operation with FMUSR disabled, FMCON.0 bit,Flash Operation Start Bit, remains "high", which means start operation, and is not cleared even though next instruction is executed. So user should be careful to set FMUSR when executing sector erase, for no effect on other Flash sectors.

Example 14-1 Sector Erase

Case1. Erase one sector

```
                •
                •
ERASE_ONESECTOR:
                SB1
                LD      FMUSR,#0A5H             ; User program mode enable
                LD      FMSECH,#                ; Set sector address 4000H,sector 128,
                LD      FMSECL,#00H             ; among sector 0~511
                LD      FMCON,#10100001B        ; Select erase mode enable & Start sector erase

ERASE_STOP:             LD      FMUSR,#00H              ; User program mode disable
                SB0
```

Case2.Erase Flash memory space from sector (n) to sector (n + m)

```
                •
                •
;;Pre-define the number of sector to erase
      LD        SecNumH,#00H            ; Set sector number
                LD      SecNumL,#128            ; Selection the sector128 (base address 4000H)
                LD      R6,#01H                 ; Set the sector range (m) to erase
                LD      R7,#7DH                 ; into High-byte(R6) and Low-byte(R7)
                LD      R2,SecNumH
                LD      R3,SecNumL

ERASE_LOOP:     CALL    SECTOR_ERASE
                        XOR     P4,#11111111B                   ; Display ERASE_LOOP cycle
                        INCW    RR2
                LD      SecNumH,R2
                LD      SecNumL,R3
                DECW    RR6
                LD      R8,R6
                OR      R8,R7
                CP      R8,#00H
                JP      NZ,ERASE_LOOP
                •
                •

SECTOR_ERASE:
                LD      R12,SecNumH
                        LD      R14,SecNumL
                MULT    RR12,#80H               ; Calculation the base address of a target sector
                MULT    RR14,#80H               ; The size of one sector is 128 bytes
                ADD     R13,R14
                                                        ; BTJRF FLAGS.7,NOCARRY
                                                        ; INC   R12

NOCARRY:
                LD      R10,R13
                LD      R11,R15
ERASE_START:
                SB1
                LD      FMUSR,#0A5H             ; User program mode enable
                LD      FMSECH,R10              ; Set sector address
                LD      FMSECL,R11
                LD      FMCON,#10100001B        ; Select erase mode enable & Start sector erase

ERASE_STOP:
                LD      FMUSR,#00H              ; User program mode disable
                SB0
                RET
```

14.4.5 Programming

A Flash memory is programmed in one-byte unit after sector erase. The write operation of programming starts by "LDC" instruction.

The Program Procedure in User Program Mode

- Must erase target sectors before programming.
- Set Flash Memory User Programming Enable Register (FMUSR) to "10100101B".
- Set Flash Memory Control Register (FMCON) to "0101000XB".
- Set Flash Memory Sector Address Register (FMSECH and FMSECL) to the sector base address of destination address to write data.
- Load a transmission data into a working register.
- Load a Flash memory upper address into upper register of pair working register.
- Load a Flash memory lower address into lower register of pair working register.
- Load transmission data to Flash memory location area on "LDC" instruction by indirectly addressing mode
- Set Flash Memory User Programming Enable Register (FMUSR) to "00000000B".

NOTE: In programming mode, it doesn't care whether FMCON.0's value is "0" or "1".

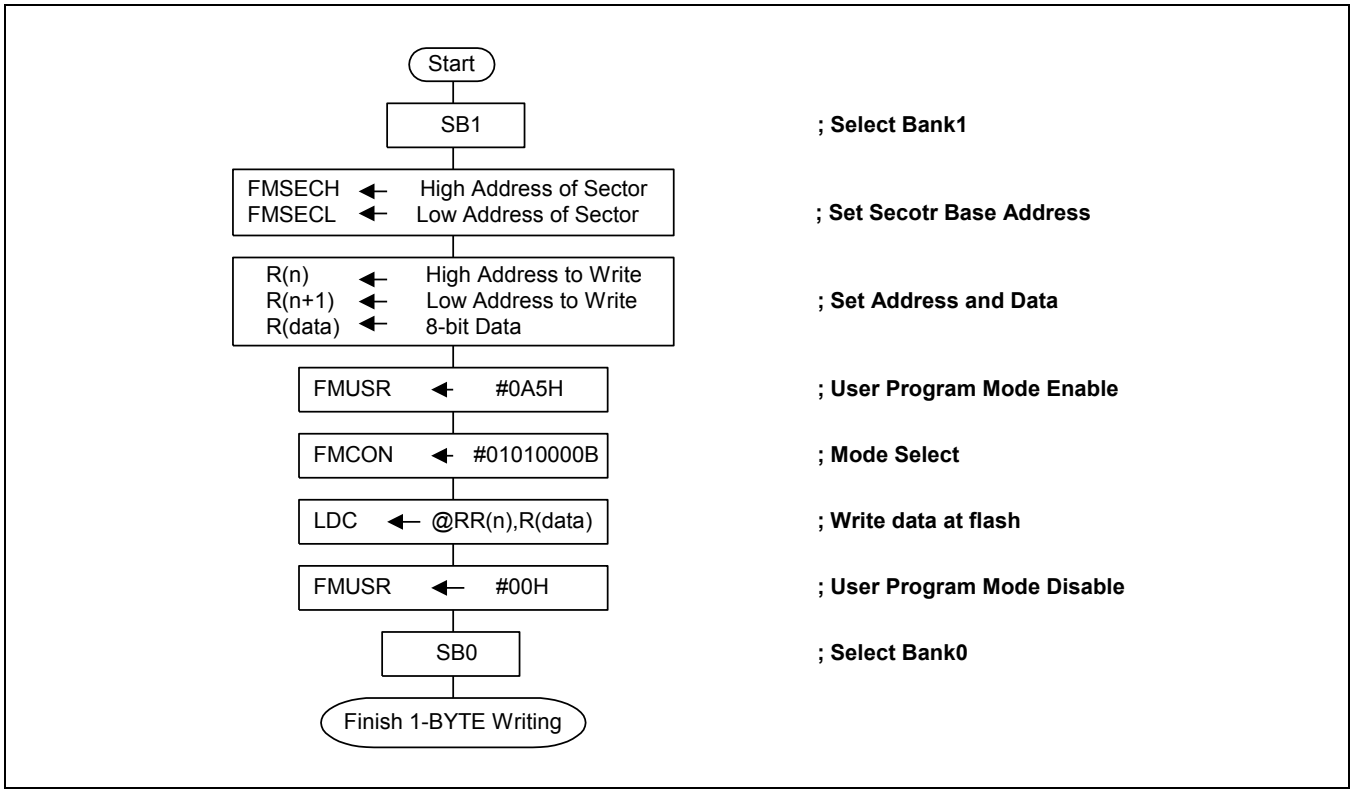

Figure 14-9 Byte Program Flowchart in a User Program Mode

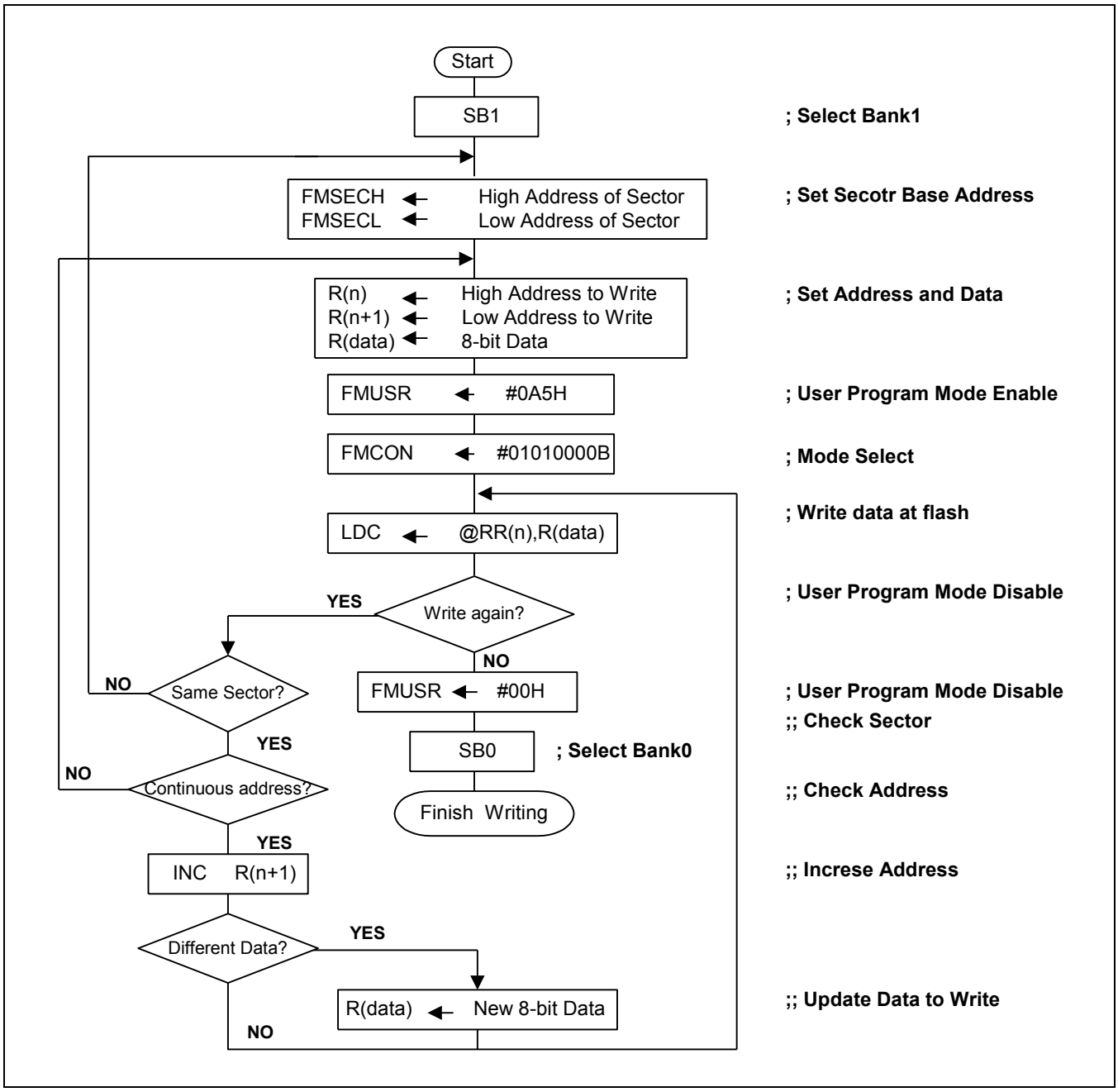

Figure 14-10 Program Flowchart in a User Program Mode

Example 14-2 Programming

Case1. 1 byte programming

```
                •
                •
WR_BYTE:                                    ; Write data “AAH”  to destination address 4010H
                SB1
                LD      FMUSR,#0A5H         ; User program mode enable
                LD      FMCON,#01010000B    ; Selection programming mode
                LD      FMSECH,#40H         ; Set the base address of sector (4000H)
                LD      FMSECL,#00H
                LD      R9,#0AAH            ; Load data “AA” to write
                LD      R10,#40H            ; Load Flash memory upper address into upper register of
                                              pair working register
                LD      R11,#10H            ; Load Flash memory lower address into lower register of
                                              pair working register
                LDC     @RR10,R9            ; Write data "AAH" at Flash memory location (4010H)

                LD      FMUSR,#00H          ; User program mode disable
                SB0
```

Case2. Programming in the same sector

```
                •
                •
WR_INSECTOR:                                ; RR10-->Address copy (R10 –high address,R11-low address)

                LD      R0,#40H

                SB1
                LD      FMUSR,#0A5H         ; User program mode enable
                LD      FMCON,#01010000B    ; Selection programming mode and Start programming
                LD      FMSECH,#40H         ; Set the base address of sector located in target address
                                              to write data
                LD      FMSECL,#00H         ; The sector 128’s base address is 4000H.
                LD      R9,#33H             ; Load data “33H” to write
                LD      R10,#40H            ; Load Flash memory upper address into upper register of
                                              pair working register
                LD      R11,#40H            ; Load Flash memory lower address into lower register of
                                              pair working register
WR_BYTE:
                LDC     @RR10,R9            ; Write data '33H' at Flash memory location
                INC     R11                 ; Reset address in the same sector by INC instruction
                DJNZ    R0,WR_BYTE          ; Check whether the end address for programming reach
                                              407FH or not.

                LD      FMUSR,#00H          ; User Program mode disable
                SB0
```

Case3. Programming to the Flash memory space located in other sectors

```
                •
                •
WR_INSECTOR2:
                LD      R0,#40H
                LD      R1,#40H

                SB1
                LD      FMUSR,#0A5H             ; User program mode enable
                LD      FMCON,#01010000B        ; Selection programming mode and Start programming
                LD      FMSECH,#01H             ; Set the base address of sector located in target
                                                  address to write data
                LD      FMSECL,#00H             ; The sector 2's base address is 100H
                LD      R9,#0CCH                ; Load data "CCH" to write
                LD      R10,#01H                ; Load Flash memory upper address into upper register of
                                                  pair working register
                LD      R11,#40H                ; Load Flash memory lower address into lower register of
                                                  pair working register
                CALL    WR_BYTE

                LD      R0,#40H

WR_INSECTOR50:
                LD      FMSECH,#19H             ; Set the base address of sector located in target address
                                                  to write data
                LD      FMSECL,#00H             ; The sector 50's base address is 1900H
                LD      R9,# 55H                ; Load data "55H" to write
                LD      R10,#19H                ; Load  Flash memory upper address into upper register of
                                                  pair working register
                LD      R11,#40H                ; Load Flash memory lower address into lower register of
                                                  pair working register
                CALL    WR_BYTE

WR_INSECTOR128:
                LD      FMSECH,#40H             ; Set the base address of sector located in target address
                                                  to write data
                LD      FMSECL,#00H             ; The sector 128's base address is 4000H
                LD      R9,#0A3H                      ; Load data "A3H" to write
                LD      R10,#40H                ; Load  Flash memory upper address into upper register of
                                                  pair working register
                LD      R11,#40H                ; Load Flash memory lower address into lower register of
                                                  pair working register

WR_BYTE1:
                LDC     @RR10,R9                ; Write data 'A3H' at Flash memory location
                INC     R11
                DJNZ    R1,WR_BYTE1

                LD      FMUSR,#00H              ; User Program mode disable
                SB0
                •
                •

WR_BYTE:
                LDC     @RR10,R9                ; Write data written by R9  at Flash  memory location
                INC     R11
                DJNZ    R0,WR_BYTE
                RET
```

14.4.6 Reading

The read operation starts by "LDC" instruction.

The Program Procedure in User Program Mode

1. Load a Flash memory upper address into upper register of pair working register.
2. Load a Flash memory lower address into lower register of pair working register.
3. Load receive data from Flash memory location area on "LDC" instruction by indirectly addressing mode

Example 14-3 Reading

```
            •
            •
            LD      R2,#03H             ; Load Flash memory's upper address to upper register of
                                          pair working register
            LD      R3,#00H             ; Load Flash memory's lower address to lower register of
                                          pair working register

LOOP:       LDC     R0,@RR2             ; Read data from Flash memory location
                                          (Between 300H and 3FFH)
            INC     R3
            CP      R3,#0FFH
            JP      NZ,LOOP
            •
            •
            •
            •
```

14.4.7 Hard Lock Protection

User can set Hard Lock Protection by writing "0110B" in FMCON7-4. This function prevents the changes of data in a Flash memory area. If this function is enabled, the user cannot write or erase the data in a Flash memory area.

This protection can be released by the chip erase execution in the tool program mode. In terms of user program mode, the procedure of setting Hard Lock Protection is following that. In tool mode, the manufacturer of serial tool writer could support Hardware Protection. Please refer to the manual of serial program writer tool provided by the manufacturer.

The Program Procedure in User Program Mode

1. Set Flash Memory User Programming Enable Register (FMUSR) to "10100101B".
2. Set Flash Memory Control Register (FMCON) to "01100001B".
3. Set Flash Memory User Programming Enable Register (FMUSR) to "00000000B".

Example 14-4 Hard Lock Protection

```
•
•
SB1
LD      FMUSR,#0A5H           ; User program mode enable
LD      FMCON,#01100001B      ; Select Hard Lock Mode and Start protection
LD      FMUSR,#00H            ; User program mode disable
SB0
•
•
```

15 Low Voltage Detector

15.1 Overview

The S3F80Q5 micro-controller has a built-in Low Voltage Detector (LVD) circuit, which allows LVD and LVD_FLAG detection of power voltage. The S3F80Q5 has two options in LVD and LVD_FLAG voltage level according to the operating frequency to be set by Smart Option (Refer to page 2-3 and page 14-3).

Operating Frequency 8 MHz:

- Low voltage detect level for Backup Mode and Reset (LVD): 1.65 V (Typ.) ± 50 mV
- Low voltage detect level for Flash Flag Bit (LVD_FLAG): 1.90, 2.00, 2.10, 2.20 V (Typ.) ± 100 mV

After power-on, LVD block is always enabled. LVD block is only disable when executed STOP instruction. The LVD block of S3F80Q5 consists of two comparators and a resistor string. One of comparators is for LVD detection, and the other is for LVD_FLAG detection.

15.1.1 LVD

LVD circuit supplies two operating modes by one comparator: Backup Mode input and system reset input. The S3F80Q5 can enter the Backup Mode and generate the reset signal by the LVD level detection using LVD circuit. When LVD circuit detects the LVD level in falling power, S3F80Q5 enters the Backup Mode.
Backup Mode input automatically creates a chip stop state. When LVD circuit detects the LVD level in rising power, the system reset occurs. This reset by LVD circuit is one of the S3F80Q5 reset sources. (Refer to page 8-3 for more.)

15.1.2 LVD FLAG

The other comparator's output makes LVD indicator flag bit "1" or "0". That is used to indicate low voltage level. When the power voltage is below the LVD_FLAG level, the bit 0 of LVDCON register is set "1". When the power voltage is above the LVD_FLAG level, the bit 0 of LVDCON register is set "0" automatically. LVDCON.0 can be used flag bit to indicate low battery in IR application or others.

NOTE:

1. A term of LVD is a symbol of parameter that means "Low Level Detect Voltage for Backup Mode".
2. A term of LVD_FLAG is a symbol of parameter that means "Low Level Detect Voltage for Flag Indicator".
3. The voltage gaps (LVD_GAPn (n = 1 to 4)) between LVD and LVD FLAGn (n = 1 to 4) have ± 80 mV distribution. LVD and LVD FLAGn (n = 1 to 4) are not overlapped

Symbol	Min.	Typ.	Max.	Unit
LVD_GAP1	170	250	330	mV
LVD_GAP2	270	350	430	mV
LVD_GAP3	370	450	530	mV
LVD_GAP4	470	550	630	mV

Symbol	Min.	Typ.	Max.	Unit
GAP Between LVD_Flag1 and LVD_Flag2	50	100	150	mV
GAP Between LVD_Flag2 and LVD_Flag3	50	100	150	mV
GAP Between LVD_Flag3 and LVD_Flag4	50	100	150	mV

Table 15-1 LVD Enable Time

(T_A = 0 °C to +70 °C)

Parameter	Symbol	Conditions	Min.	Typ.	Max.	Unit
LVD enable time	tLVD	V_{DD} = 1.4 V	–	–	50	μs
		V_{DD} = 3.0 V (simulation result)	–	–	45	μs

In Stop Mode, LVD turns off. When external interrupt occurs, LVD needs tLVD during max.50 μs to wake up. If VDD is below VLVD after external interrupt, chip enters Backup. Because tLVD time is not enough to start oscillation, chip is not operated to abnormal state.

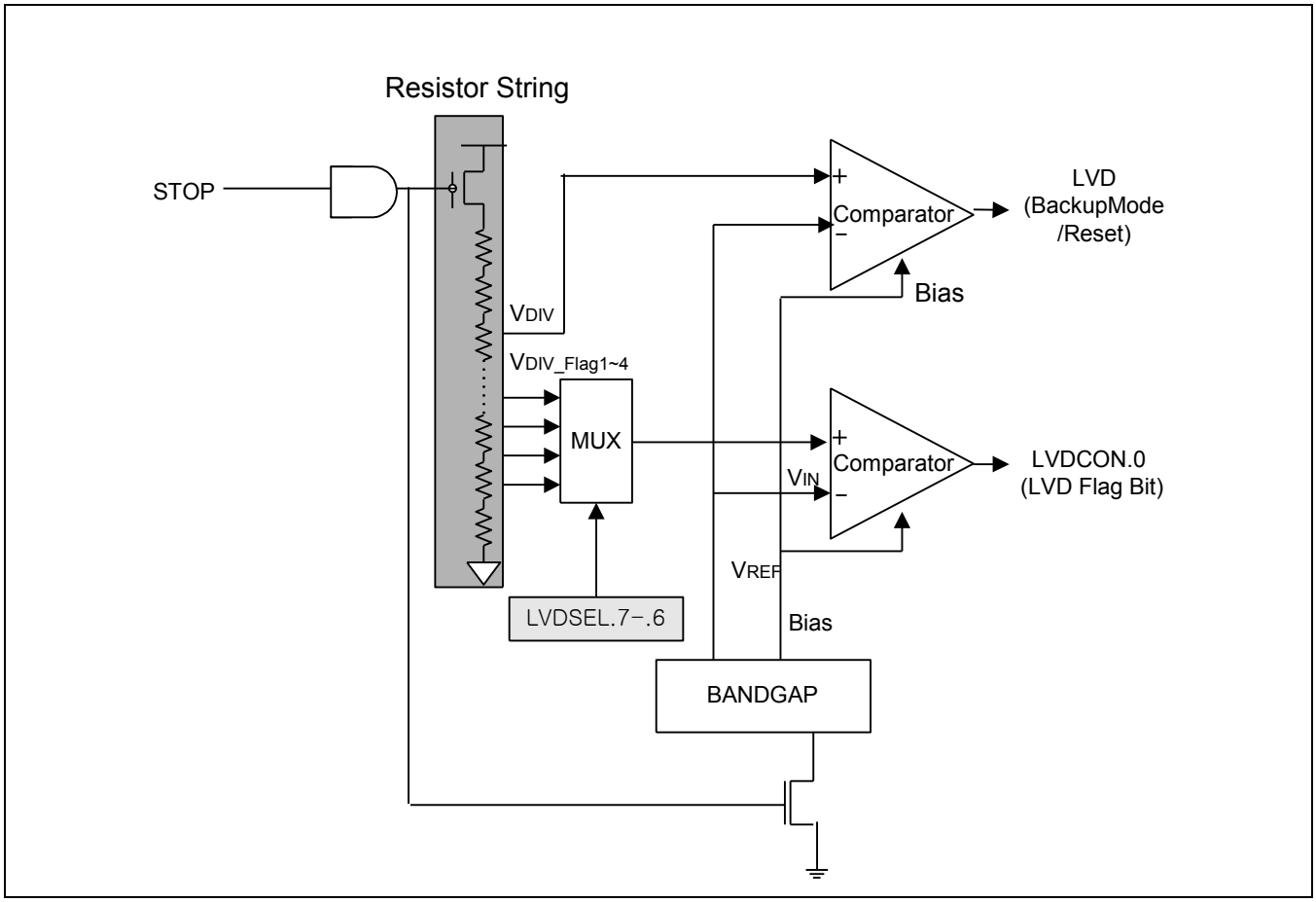

Figure 15-1 Low Voltage Detect (LVD) Block Diagram

15.1.3 Low Voltage Detector Control Register (LVDCON)

LVDCON.0 is used flag bit to indicate low battery in IR application or others. When LVD circuit detects LVD_FLAG, LVDCON.0 flag bit is set automatically. The reset value of LVDCON is #00H.

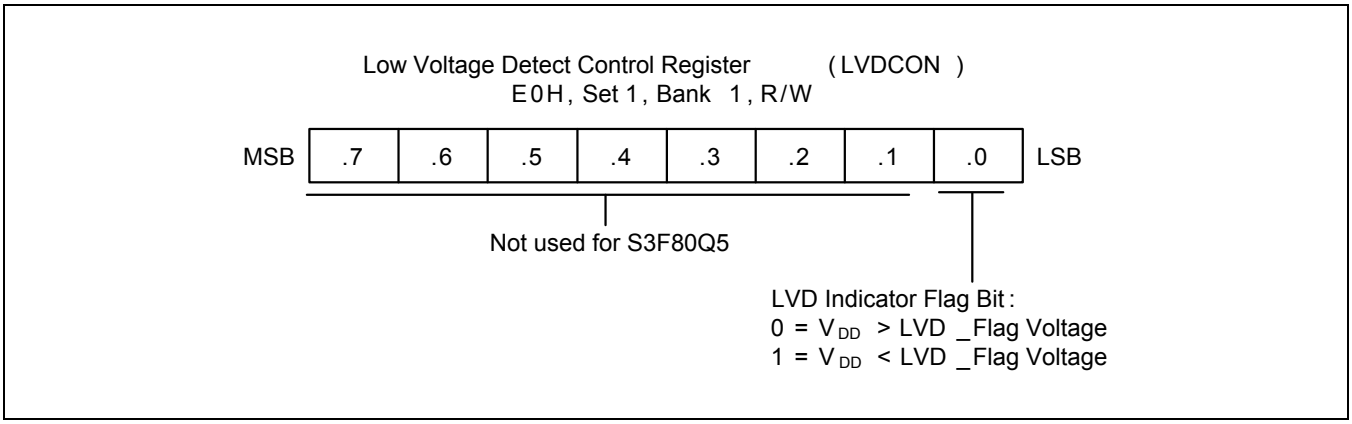

Figure 15-2 Low Voltage Detect Control Register (LVDCON)

15.1.4 Low Voltage Detector Flag Selection Register (LVDSEL)

LVDSEL is used to select LVD flag level. The reset value of LVDSEL is #00H.

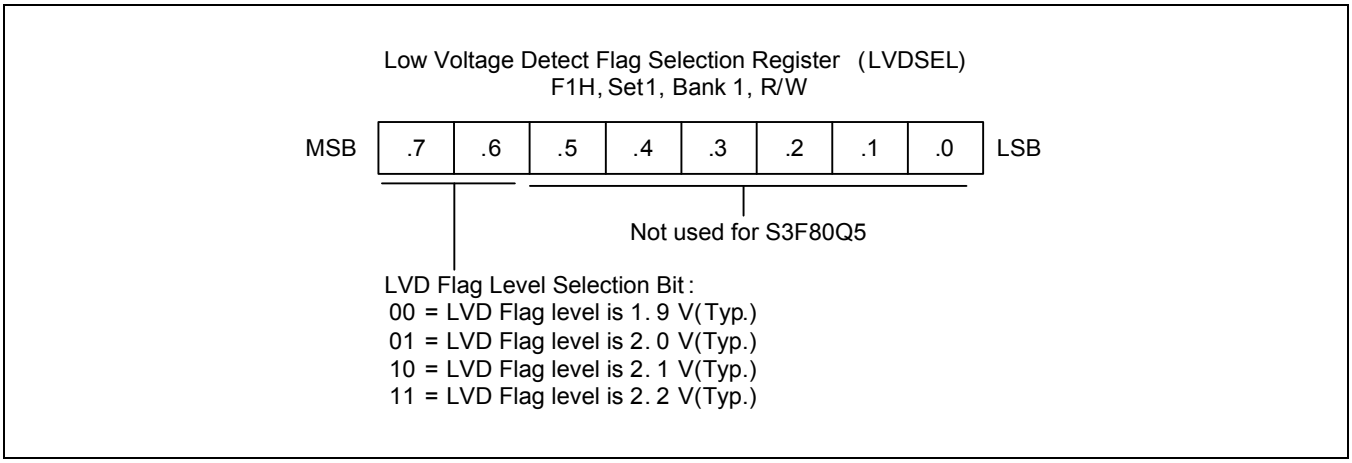

Figure 15-3 Low Voltage Detect Flag Selection Register (LVDSEL)

16 SPI-Serial Peripheral Interface

16.1 Overview

The Serial Peripheral Interface (SPI) allows high-speed synchronous data transfer between the MCU and peripheral devices or between several Zilog devices:

- Full-duplex, 4-wire Synchronous Data Transfer
- Master or Slave Operation
- LSB First or MSB First Data Transfer
- End of Transmission Interrupt Flag
- Write Collision Flag Protection
- Mode Fault Flag bit
- Wake-up from Idle Mode
- Double Speed Master SPI Mode

The S3F80Q5 SPI circuit supports byte serial transfers in either Master or Slave modes. The block diagram of the SPI circuit is shown in *Figure 16-1*. The block contains buffer for receive data for maximum flexibility and throughput. The S3F80Q5 can be configured as either an SPI Master or Slave. The external interface consists of Master-Out/Slave-In (MOSI), Master-In/Slave-Out (MISO), Serial Clock (SCK), and Slave Select (NSS). Read from SPI Data register; (see *Figure 16-5*) read the receive buffer (double buffering) contents.

SPI modes are activated by setting the appropriate bits in the SPI Control Register as described below.

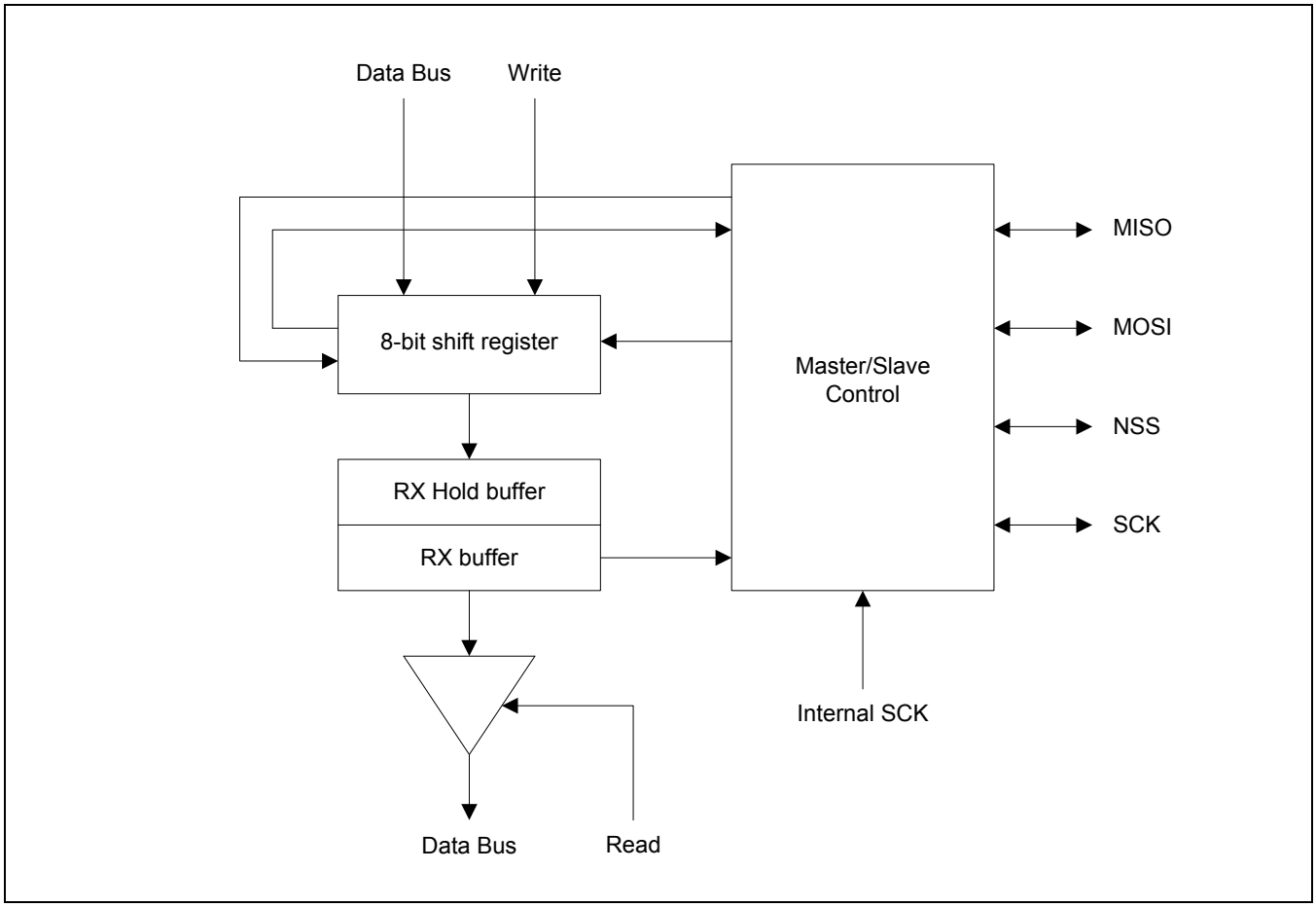

Figure 16-1 SPI Block Diagram

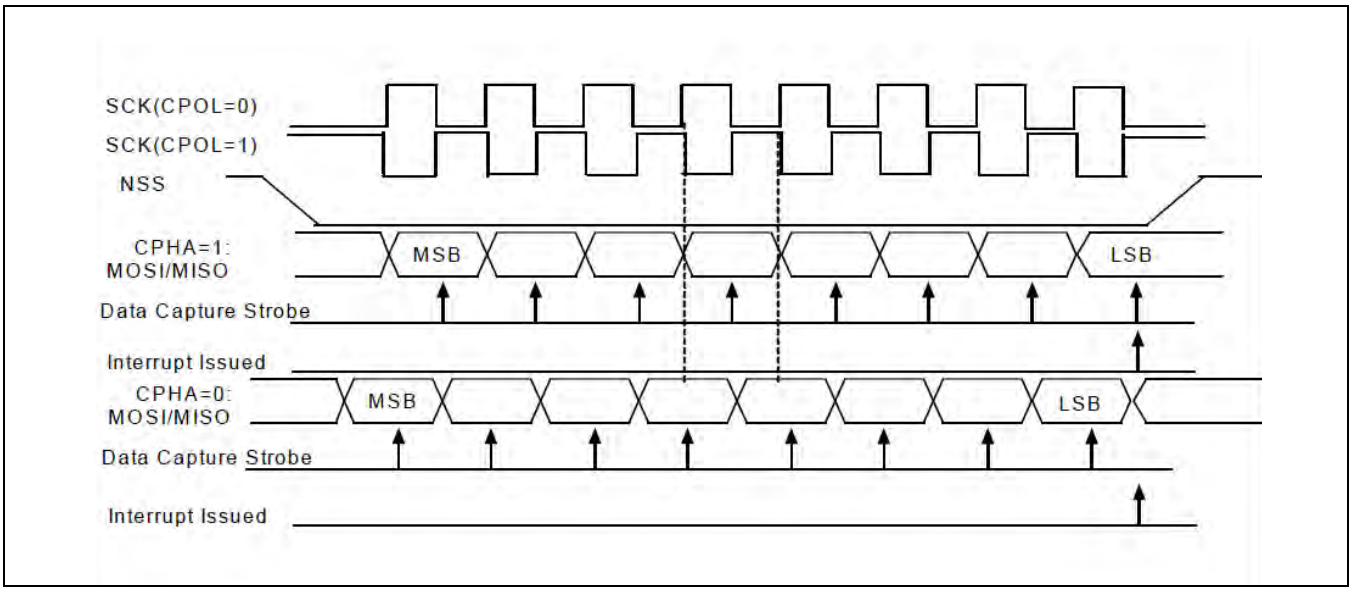

Figure 16-2 SPI Data Timing

16.1.1 Operation as an SPI Master

Only an SPI Master can initiate a byte/data transfer, this is done by the Master writing to the SPI Data register.

The Master shifts out 8bits of data along with the serial clock SCK for the Slave. The Master's outgoing byte is replaced with an incoming one from a Slave device. When the last bit is received, the shift register contents are transferred to the Receive Buffer and an interrupt is generated.

When operating as a Master, an active LOW Slave Select (NSS) must be generated to enable a Slave for a byte transfer. This Slave Select is generated under firmware control, and is not part of the SPI internal hardware, any available GPIO can be used for the Master's Slave Select Output. When the Master writes to the SPI Data Register, if the shift register is not busy shifting a previous byte, the data will be loaded into the shift register and shifting will begin. If the shift register is busy, a write collision error is generated. The transfer continues undisturbed, and the write data that caused the error is not written to the shifter.

The byte shifting and SCK generation are handled by the hardware (based on firmware selection of the clock source). Data is shifted out on the MOSI pin and the serial clock is output on the SCK pin. Data is received from the slave on the MISO pin.

16.1.2 Master SCK Selection

The Master SCK is programmable to one of eight clock settings, as shown in *Table 16-2*. The frequency is selected with the Clock Select Bits of SPI control register and Double SPI Speed Bit of SPI status register. The hardware provides 8 output clocks on the SCK pin for each byte transfer. Clock phase and polarity are selected by the CPHA and CPOL control bits (see *Figure 16-3*)

16.1.3 Operation as an SPI Slave

In Slave mode, the chip receives SCK from an external master on pin P1.2. Data from the master is shifted in on the MOSI pin, while data is being shifted out of the slave on the MISO pin. In addition, the active LOW Slave Select must be asserted to enable the slave for transmit. The Slave Select pin is P1.3. These pins is automatically configured by enabling SPI Enable bit.

In Slave mode, writes to the SPI Data Register, if the Slave Select is asserted (NSS LOW) and the shift register is not busy shifting a previous byte, the data will be loaded into the shift register. If the register is busy, a write collision error is generated. The transfer continues undisturbed, and the write data that caused the error is not written to the shifter. If the Slave Select is not active when the data is loaded, data is not transferred to the shift register until Slave Select is asserted.

If the Slave Select is de-asserted before a byte transfer is complete, the transfer is aborted and no interrupt is generated. Whenever Slave Select is asserted, the data is automatically reloaded into the shift register.

Clock phase and polarity must be selected to match the SPI master, using the control bits of SPICON (See *Figure 16-3*).

The SPI slave logic continues to operate in suspend, so if the SPI interrupt is enabled, the device can go into suspend during a SPI slave transaction, and it will wake up at the interrupt that signals the end of the byte transfer.

16.1.4 SPI Status and Control

The SPI control register is shown in *Figure 16-3*. The timing diagram in *Figure 16-2* shows the clock and data states for the various SPI modes.

16.1.5 SPI Interrupt

For SPI, an interrupt request is generated after a byte is received or transmitted. After the interrupt, the received data byte can be read from the SPI Data Register, and the SPI interrupt flag bit will be high.

Table 16-1 SPI Pin Assignment

SPI Function	GPIO Pin	Comment
Slave Select (NSS)	P1.3	For Master Mode, Firmware sets NSS, can be used as GPIO pin. For Slave Mode, NSS is an active LOW input.
Master Out, Slave In (MOSI)	P1.0	Data output for master, data input for slave.
Master In, Slave Out (MISO)	P1.1	Data input for master, data output for slave.
SCK	P1.2	SPI Clock: Output for master, input for slave.

Table 16-2 SCK Rate Selection

SPICON.1–0	SPISTAT.0	SCK Rate
00	1	$F_{osc}/2$
00	0	$F_{osc}/4$
01	1	$F_{osc}/8$
01	0	$F_{osc}/16$
10	1	$F_{osc}/32$
10	0	$F_{osc}/64$
11	1	$F_{osc}/128$
11	0	$F_{osc}/256$

16.1.6 SPI System Errors

Three system errors can be detected by the SPI system. The first type of error arises in a multiple-master system when more than one SPI device simultaneously tries to be a master. This error is called a mode fault. The second type of error, write collision, indicates that an attempt was made to write data to the SPIDATA while a transfer was in progress. The third type of error, receive overrun, occurs when an SPI transfer completes before the previous data has been read from the receive hold buffer.

When the SPI system is configured as a master and the NSS input line goes to active low, a mode fault error has occurred–usually because two devices have attempted to act as master at the same time. In cases where more than one device is concurrently configured as a master, there is a chance of contention between two pin drivers.

For push-pull CMOS drivers, this contention can cause permanent damage. The mode fault mechanism attempts to protect the device by disabling the drivers. The master/slave selection bit in the SPICON and all four P1CON control bits associated with the SPI are cleared. If NSS is an input and is driven low when the SPI is in Master mode, this will also set the SPI Interrupt Flag. SPIF is cleared by hardware when executing the corresponding interrupt handling vector. Alternatively, the SPIF bit is cleared by first reading the SPI Status Register with SPIF set, then accessing the SPI Data Register (SPIDATA).

Other precautions may need to be taken to prevent driver damage. If two devices are made masters at the same time, mode fault does not help protect either one unless one of them selects the other as slave. The amount of damage possible depends on the length of time both devices attempt to act as master.

A receive overrun occurs if previous data in the read buffer has not been read out when a transfer cycle is completed and the new data is loaded into the read buffer.

A write collision error occurs if the SPIDATA is written while a transfer is in progress. Because the SPIDATA is not double buffered in the transmit direction, writes to SPIDATA cause data to be written directly into the SPI shift register. Because this write corrupts any transfer in progress, a write collision error is generated. The transfer continues undisturbed, and the write data that caused the error is not written to the shifter.

A write collision is normally a slave error because a slave has no control over when a master initiates a transfer. A master knows when a transfer is in progress, so there is no reason for a master to generate a write-collision error, although the SPI logic can detect write collisions in both master and slave devices.

16.1.7 SPI Control Register (SPICON)

The control register for the SPI is called SPICON at address E9H, Bank 1. It has the following control functions:

- Operating mode and SCK rate selection
- Clock Phase and Clock Polarity selection
- Data order selection
- SPI Enable/Disable
- SPI Interrupt Enable/Disable

A reset clears the SPICON value to "00H". So, if you want to use SPI module, you must write appropriate value to SPICON.

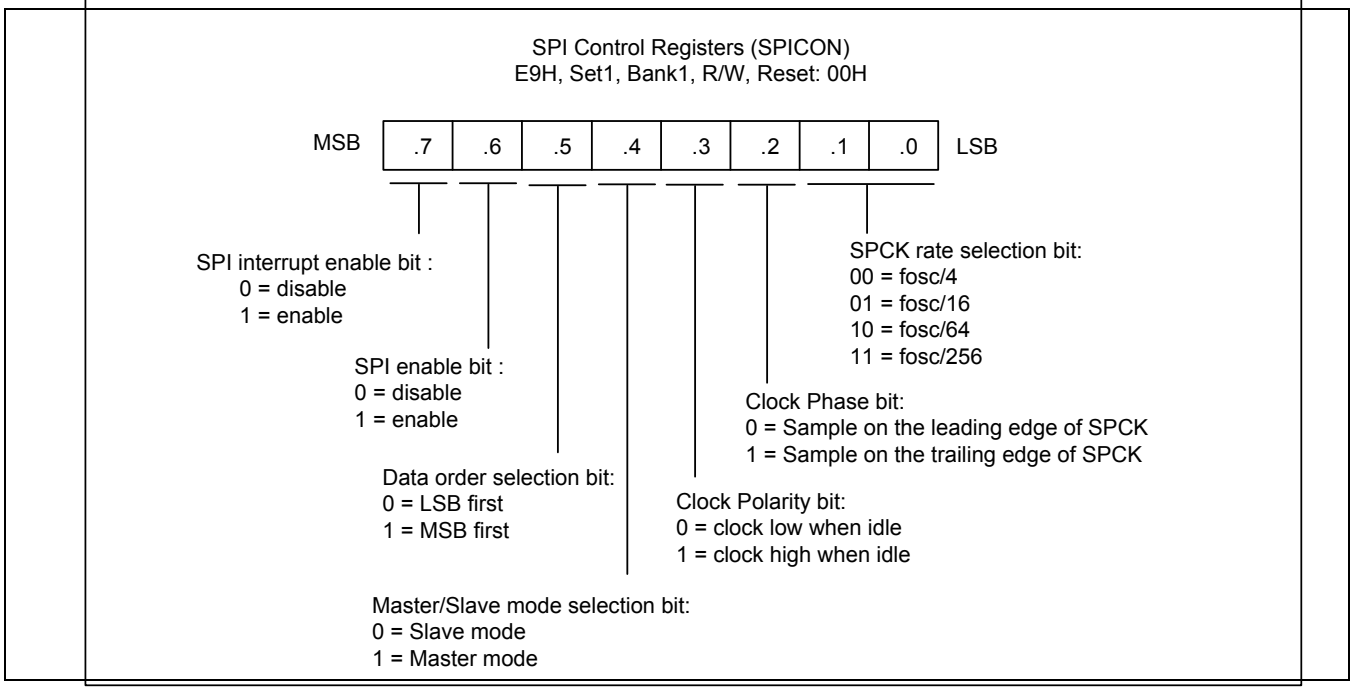

Figure 16-3 SPI Control Register (SPICON)

16.1.8 SPI Status Register (SPISTAT)

Two system errors can be detected by the SPI system. The first type of error arises in a multiple-master system when more than one SPI device simultaneously tries to be a master. This error is called a mode fault. The second type of error, write collision, indicates that an attempt was made to write data to the SPDR while a transfer was in progress. The third type of error, receive overrun, occurs when an SPI transfer completes before the previous data has been read from the receive hold buffer.

The control register for the SPI is called SPISTAT at address EAH, Bank 1. It has the following control functions:

- Double SPI speed
- SPI interrupt flag
- Write collision flag
- Mode fault flag
- Receive overrun flag

Clearing the Write Collision bit is accomplished by reading the SPISTAT (with Write Collision bit set) followed by an access of SPIDATA.

To clear the Mode Fault bit, read the SPISTAT (with Mode Fault bit set), then write to the SPICON.

SPIF is cleared by hardware when executing the corresponding interrupt handling vector. Alternatively, the SPIF bit is cleared by first reading the SPI Status Register with SPIF set, then accessing the SPI Data Register (SPIDATA).

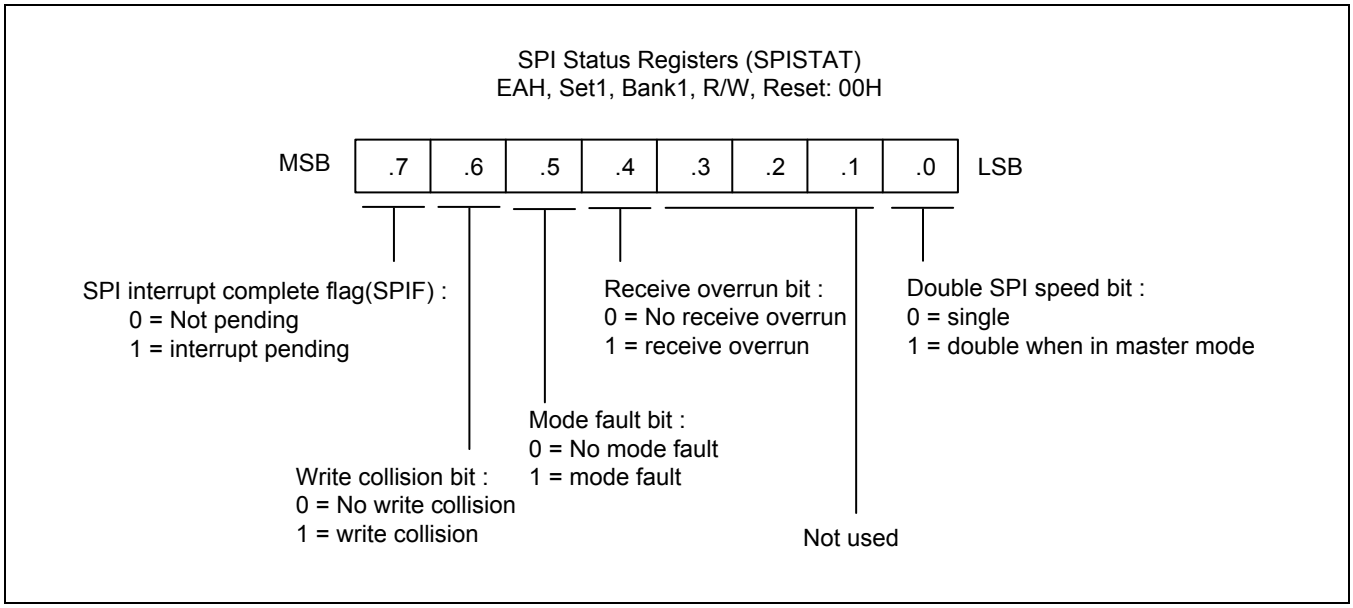

Figure 16-4 SPI Status Register (SPISTAT)

16.1.9 SPI Data Register (SPIDATA)

This register holds the SPI Data. The Firmware writes this register for transmitting data to External SPI Module. The Firmware reads the register to get data received by external SPI module.

SPIDATA is located at address F6H and is RW addressable.

SPI Data Registers (SPIDATA)
EBH, Set1, Bank1, R/W, Reset: FFH

MSB	.7	.6	.5	.4	.3	.2	.1	.0	LSB

Figure 16-5 SPI Data Register (SPIDATA)

17 FRT

17.1 Overview

The S3F80Q5 microcontroller has a 24-bit timer called FRT. FRT can operate in the Stop Mode and be used to wake up from Stop Mode.

FRT has the following components:

- One control register, FRTCON (FCH, set 1, Bank 1, RW)
- Three 8-bit counter registers, FRTCNT0, FRTCNT1 and FRTCNT2 (from F8H to F6H, set 1, Bank 1, read-only)
- Three 8-bit reference data registers, FRTDAT0, FRTDAT1 and FRTDAT2 (from FBH and F9H, set 1, Bank1, RW)
- One 24-bit comparator

FRT uses the internal OSC as the clock source:

- Internal clock input from the internal OSC 15 kHz
- Internal OSC(IOSC) divided by 2, 4 or 16

FRT can be used in the normal, idle, and Stop Mode:

- To generate a FRT match interrupt (IRQ2, vector EEH) when the 24-bit FRT count value matches the 24-bit value written to the reference data registers.

17.1.1 FRT Match Interrupt

FRT can be used to generate a match interrupt (IRQ2, vector EEH) when the 24-bit counter value matches the value written to the FRT reference data registers, FRTDATn. When a match condition is detected by the 24-bit comparator, the match interrupt is generated, the counter value is cleared, and up counting resumes from "00H".

The application program can poll the FRT match interrupt pending bit, FRTCON.0, to detect when a FRT match interrupt pending condition exists (FRTCON.0 = "1"). When the interrupt request is acknowledged by the CPU and the service routine starts, the interrupt service routine for vector EEH must clear the interrupt pending condition by writing a "0" to FRTCON.0.

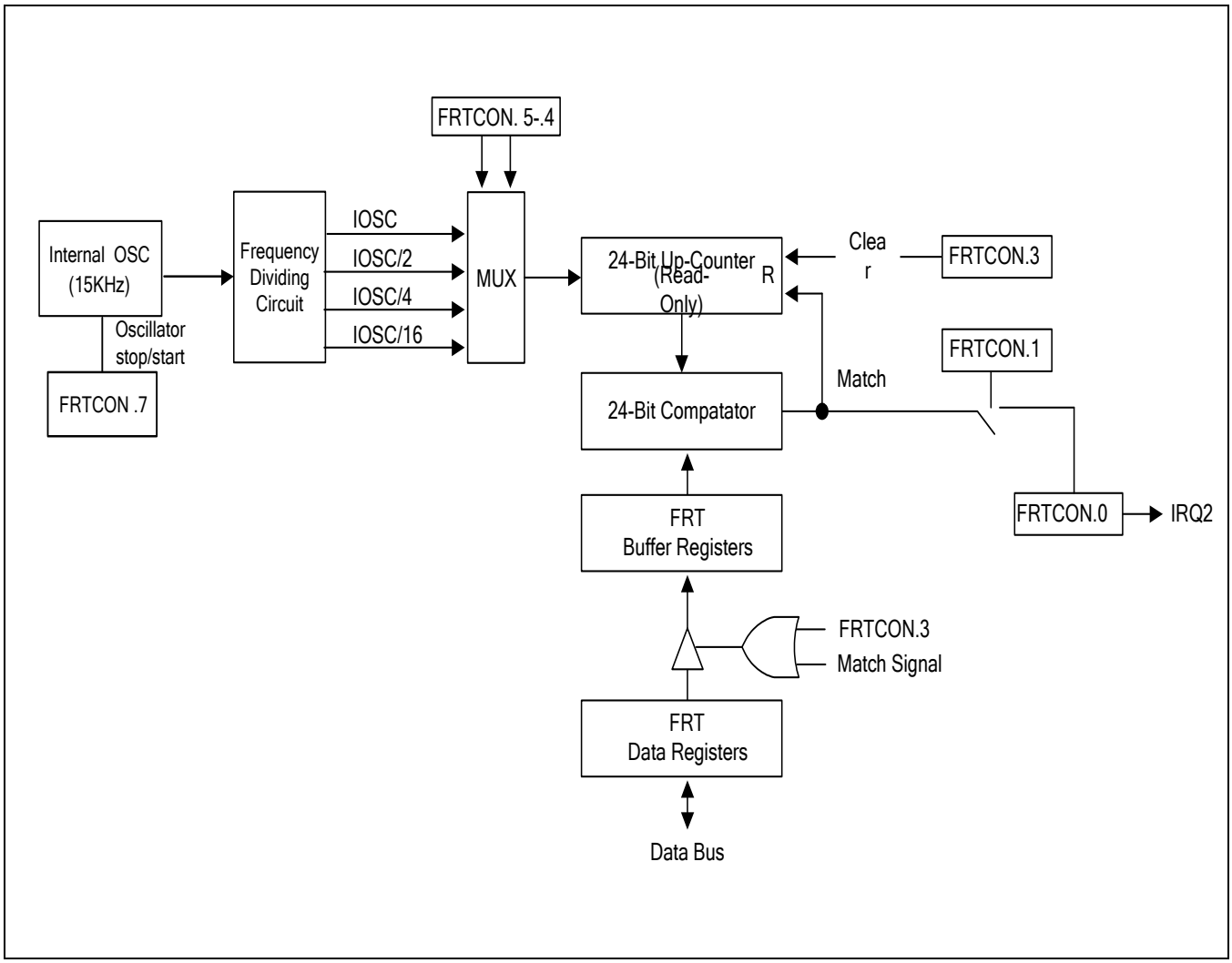

Figure 17-1 FRT Block Diagram

17.1.2 FRT Control Register (FRTCON)

The FRT control register, FRTCON, is located in set 1, FCH, Bank1 and is read/write addressable.

FRTCON contains control settings for the following FRT functions:

- FRT counter clear
- FRT match interrupt enable/disable
- FRT interrupt pending control (read for status, write to clear)

A reset operation clears FRTCON to "00H", and disables the FRT interrupts.

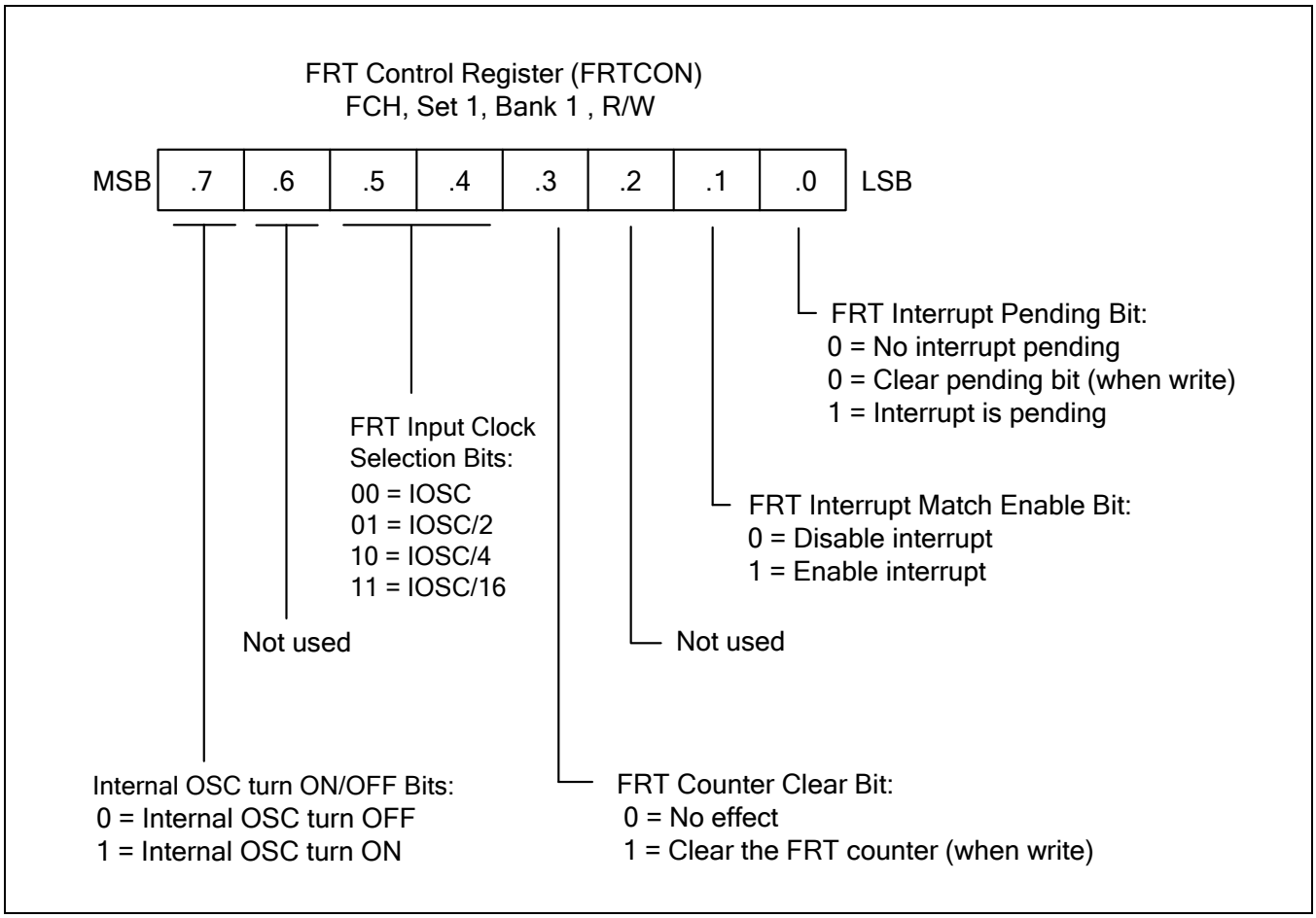

Figure 17-2 FRT Control Register (FRTCON)

FRT Counter n-Register (FRTCNTn, n=0~2)
F8H to F6H, Set 1, Bank 1, R

MSB	.7	.6	.5	.4	.3	.2	.1	.0	LSB

Reset Value: 00H

FRT Data n-Register (FRTDATn, n=0~2)
FBH to F9H, Set 1, Bank 1, R/W

MSB	.7	.6	.5	.4	.3	.2	.1	.0	LSB

Reset Value: FFH

Figure 17-3 FRT Registers (FRTCNT0 to FRTCNT2, FRTDAT0 to FRT2)

18 Electrical Data

18.1 Overview

In this section, S3F80Q5 electrical characteristics are presented in tables and graphs.

The information is arranged in the following order:

- Absolute maximum ratings
- D.C. electrical characteristics
- Characteristics of low voltage detect circuit
- Data retention supply voltage in Stop Mode
- Typical Low-Side Driver (Sink) characteristics
- Typical High-Side Driver (Source) characteristics
- Stop Mode release timing when initiated by an external interrupt
- Stop Mode release timing when initiated by a RESET
- Stop Mode release timing when initiated by a LVD
- Input/Output capacitance
- A.C. electrical characteristics
- Input timing for external interrupts
- Oscillation characteristics
- Oscillation stabilization time
- Operating voltage range
- A.C. electrical characteristics for internal Flash ROM

18.2 Absolute Maximum Ratings

Table 18-1 Absolute Maximum Ratings

(T_A = 25 °C)

Parameter	Symbol	Conditions	Rating *TBD	Unit
Supply voltage	V_{DD}	–	–0.3 to +3.8	V
Input voltage	V_{IN}	–	–0.3 to V_{DD} +0.3	V
Output voltage	V_O	All output pins	–0.3 to V_{DD} +0.3	V
Output current high	I_{OH}	One I/O pin active	–18	mA
		All I/O pins active	–60	
Output current low	I_{OL}	One I/O pin active	+30	mA
		All I/O pins active	+150	
Operating temperature	T_A	–	–25 to +85	°C
Storage temperature	T_{STG}	–	–65 to +150	°C

18.3 D.C. Electrical Characteristics

Table 18-2 D.C. Electrical Characteristics

(T_A = –25 °C to +85 °C, V_{DD} = 1.60 V to 3.6 V)

Parameter	Symbol	Conditions	Min.	Typ.	Max.	Unit
Operating voltage	V_{DD}	F_{OSC} = 4 MHz, 8 MHz	1.60	–	3.6	V
Input high voltage	V_{IH1}	All input pins except V_{IH2} and V_{IH3}	0.8 V_{DD}	–	V_{DD}	V
	V_{IH3}	X_{IN}	V_{DD} – 0.3		V_{DD}	
Input low voltage	V_{IL1}	All input pins except V_{IL3}	0	–	0.2 V_{DD}	V
	V_{IL3}	X_{IN}			0.3	
Output high voltage	V_{OH1}	V_{DD} = 1.70 V, I_{OH} = – 6mA Port 3.1 only	V_{DD} – 0.7	–	–	V
	V_{OH2}	V_{DD} = 1.70 V, I_{OH} = – 2.2mA P3.0 and P2.0	V_{DD} – 0.7			
	V_{OH3}	V_{DD} = 1.70 V, I_{OH} = – 1mA Port0, Port 1	V_{DD} – 1.0			
Output low voltage	V_{OL1}	V_{DD} = 1.70 V, I_{OL} = 8 mA Port 3.1 only	–	0.4	0.5	V
	V_{OL2}	V_{DD} = 1.70 V, I_{OL} = 5 mA P3.0 and P2.0	–	0.4	0.5	
	V_{OL3}	V_{DD} = 1.70 V, I_{OL} = 2 mA Port 0, Port 1	–	0.4	1.0	
Input high leakage current	I_{LIH1}	V_{IN} = V_{DD} All input pins except I_{LIH2} and X_{OUT}	–	–	1	µA
	I_{LIH2}	V_{IN} = V_{DD}= 1.8 V, X_{IN}			20	
Input low leakage current	I_{LIL1}	V_{IN} = 0 V All input pins except I_{LIL2} and X_{OUT}	–	–	–1	µA
	I_{LIL2}	V_{IN} = 0 V, X_{IN}			–20	
Output high leakage current	I_{LOH}	V_{OUT} = V_{DD} All output pins	–	–	1	µA
Output low leakage current	I_{LOL}	V_{OUT} = 0 V All output pins	–	–	–1	µA
Pull-up resistors	R_{L1}	V_{IN} = 0 V, V_{DD} = 2.35 V T_A = 25 °C, Ports 0–3	44	67	95	kΩ
Feedback resistor	R_{fd}	V_{IN} = V_{DD}, V_{DD} = 1.80 V T_A = 25 °C, X_{IN}	250	400	600	kΩ

(T_A = 0 °C to +70 °C, V_{DD} = 1.60 V to 3.6 V)

Parameter	Symbol	Conditions	Min.	Typ.	Max.	Unit
Supply Current (1)	IDD1	Operating Mode (2) VDD = 3.0 V 8 MHz crystal	–	1	1.6	mA
	IDD2	Idle Mode VDD = 3.0 V 8 MHz crystal	–	250	450	µA
	IDD3	Stop & FRT Mode (LVD OFF, Internal Ring OSC ON, FRT ON) VDD = 3.0 V	–	0.5	3	µA
	IDD4	Stop Mode (LVD OFF, Internal Ring OSC OFF, FRT OFF VDD = 3.0 V	–	0.3	1.5	µA

NOTE:

1. Supply current does not include current drawn through internal pull-up resistors or external output current loads.
2. IDD1 includes Flash operating current (Flash erase/write/read operation).
3. The adder by LVD on current in Backup Mode is 18 µA. Backup Mode voltage is VDD between LVD and POR.

Conditions	Min.	Typ.	Max.	Unit
LVD on current in Backup Mode VDD = 1.60 V	–	18	35	µA

Table 18-3 Characteristics of Low Voltage Detect Circuit

(T_A = –25 °C to +85 °C)

Parameter	Symbol	Conditions	Min.	Typ.	Max.	Unit
Hysteresis voltage of LVD (Slew Rate of LVD)	ΔV	□–	–	100	200	mV
Low level detect voltage for Backup Mode	LVD	–	1.60	1.65	1.70	V
Low level detect voltage for flag indicator	LVD_FLAG1	–	1.80	1.90	2.00	V
	LVD_FLAG2	–	1.90	2.00	2.10	V
	LVD_FLAG3	–	2.00	2.10	2.20	V
	LVD_FLAG4	–	2.10	2.20	2.30	V

NOTE: The voltage gaps (LVD_GAPn (n = 1 to 4)) between LVD and LVD FLAGn (n = 1 to 4) have ± 80 mV distribution. LVD and LVD FLAGn (n = 1 to 4) are not overlapped. The variation of LVD FLAGn (n = 1 to 4) and LVD always is shifted in same direction. That is, if one chip has positive tolerance (e.g. + 50 mV) in LVD FLAG, LVD has positive tolerance.

Symbol	Min.	Typ.	Max.	Unit
LVD_GAP1	170	250	330	mV
LVD_GAP2	270	350	430	mV
LVD_GAP3	370	450	530	mV
LVD_GAP4	470	550	630	mV

Symbol	Min.	Typ.	Max.	Unit
GAP Between LVD_Flag1 and LVD_Flag2	50	100	150	mV
GAP Between LVD_Flag2 and LVD_Flag3	50	100	150	mV
GAP Between LVD_Flag3 and LVD_Flag4	50	100	150	mV

Table 18-4 LVD Enable Time

(T_A = –25 °C to +85 °C)

Parameter	Symbol	Conditions	Min.	Typ.	Max.	Unit
LVD enable time	tLVD	VDD = 1.4 V	–	–	50	µs
		VDD = 3.0 V (simulation result)	–	–	45	µs

In Stop Mode, LVD turns off. When external interrupt occurs, LVD needs tLVD during max.50 µs to wake up. If VDD is below VLVD after external interrupt, chip enters Backup. Because tLVD time is not enough to start oscillation, chip is not operated to abnormal state.

Table 18-5 Power On Reset Circuit

(T_A = –25 °C to +85 °C)

Parameter	Symbol	Conditions	Min.	Typ.	Max.	Unit
Power on reset (POR) voltage	V_{POR}	–	0.8	1.1	1.4	V

Table 18-6 Falling and Rising Time of Operating Voltage

V_{DD} Slope	Min.	Typ.	Max.	Unit
R_{VF}	100	–	–	µs
R_{VR}	500	–	–	
Note: R_{VF} = falling; R_{VR} = rising.				

Table 18-7 Data Retention Supply Voltage in Stop Mode

(T_A = –25 °C to +85 °C)

Parameter	Symbol	Conditions	Min.	Typ.	Max.	Unit
Data retention supply voltage	V_{DDDR}	–	0.8	–	3.6	V
Data retention supply current	I_{DDDR}	V_{DDDR} = 1.0 V Stop Mode	–	–	1	A

NOTE: Data Retention Supply Current means that the minimum supplied current for data retention. When the battery voltage is not sufficient (i,e, the supply current is < 1 µA), the data retention could be not be guaranteed.

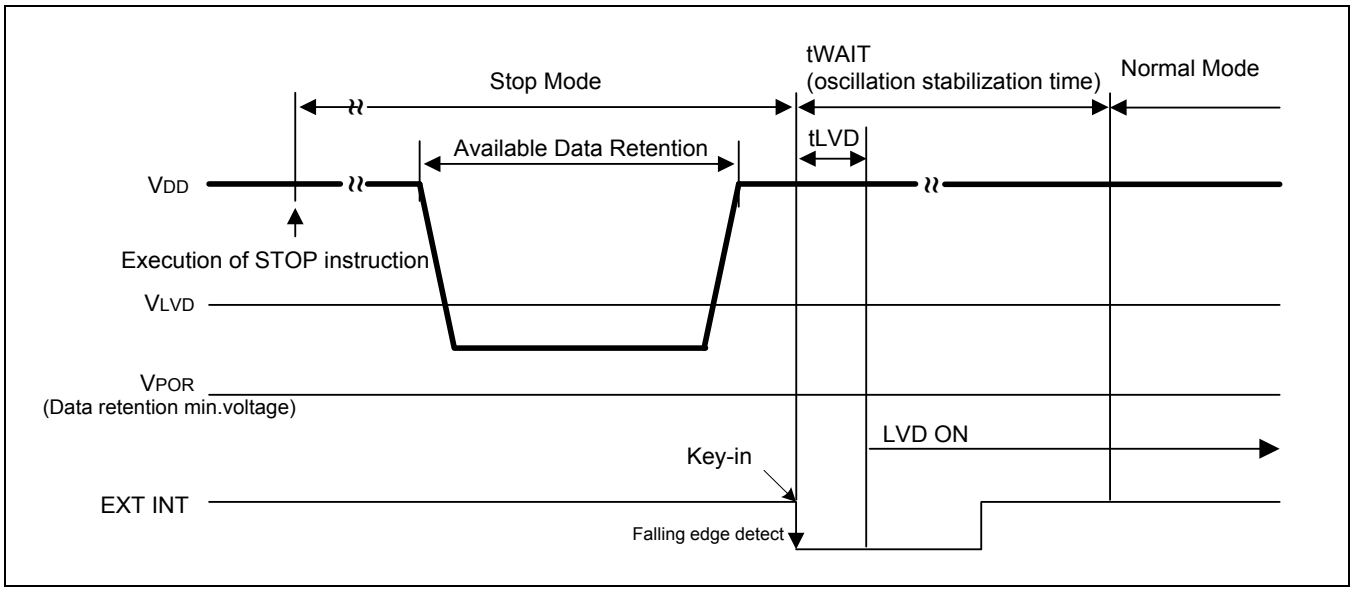

Figure 18-1 Stop Mode to Normal Mode Timing Diagram (1)

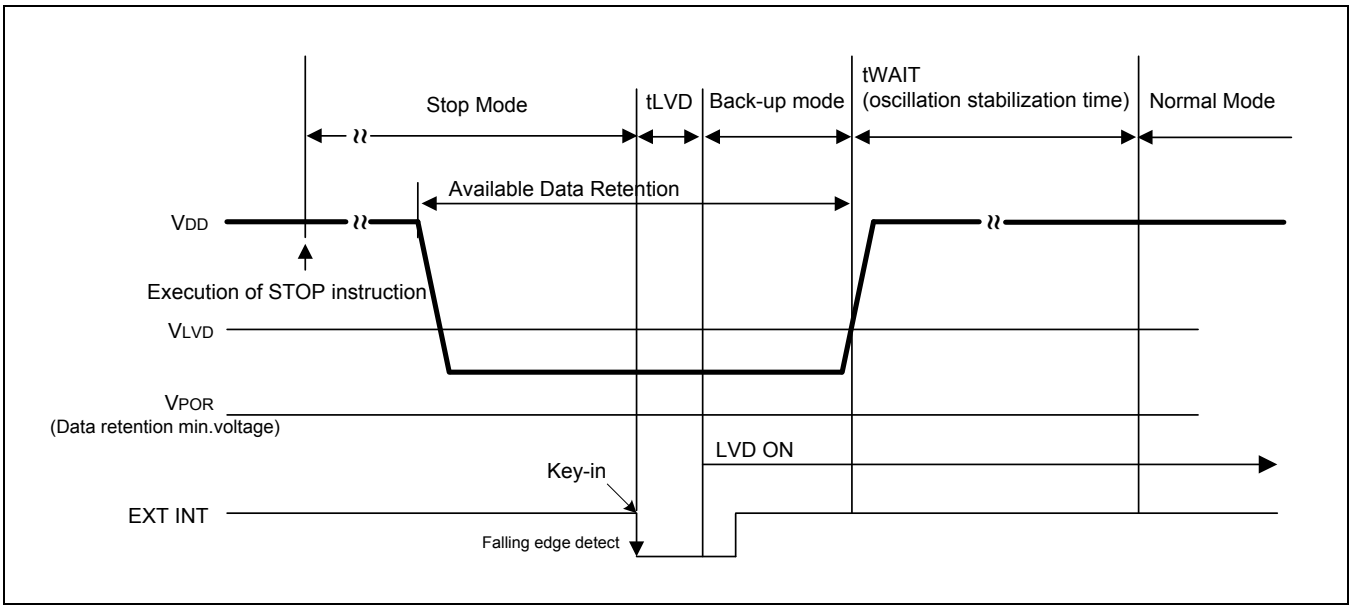

Figure 18-2 Stop Mode to Normal Mode Timing Diagram (2)

18.4 A.C. Electrical Characteristics

Table 18-8 A.C. Electrical Characteristics

(T_A = –25 °C to +85 °C)

Parameter	Symbol	Conditions	Min.	Typ.	Max.	Unit
Interrupt input High, Low width	t_{INTH}, t_{INTL}	P0.0-P0.7, P2.0 V_{DD} = 3.6 V	200	300	–	ns

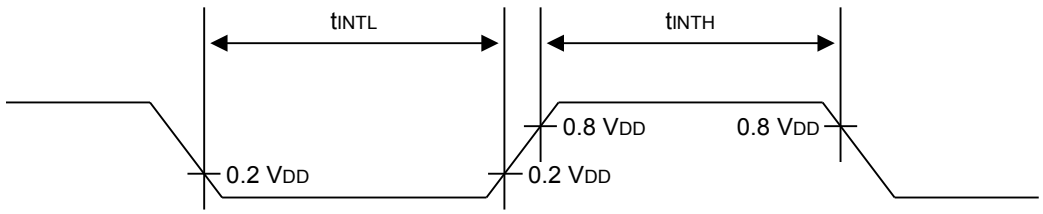

NOTE: The unit t_{CPU} means one CPU clock period.

Figure 18-3 Input Timing for External Interrupts (Port 0 and Port 2)

18.5 Oscillation Characteristics

Table 18-9 Oscillation Characteristics

(T_A = –25 °C to +85 °C)

Oscillator	Clock Circuit	Conditions	Min.	Typ.	Max.	Unit
Crystal	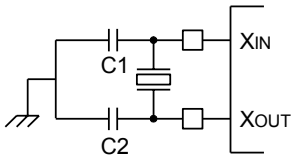	CPU clock oscillation frequency	1	–	8	MHz
Ceramic	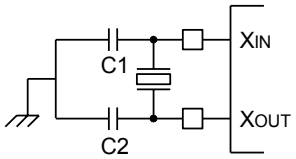	CPU clock oscillation frequency	1	–	8	MHz
External Clock	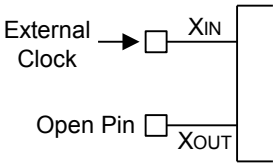	X_{IN} input frequency	1	–	8	MHz

Table 18-10 Input/Output Capacitance

(T_A = –25 °C to +85 °C)

Parameter	Symbol	Conditions	Min.	Typ.	Max.	Unit
Input capacitance	C_{IN}	f = 1 MHz V_{DD} = 0 V, unmeasured pins are connected to V_{SS}	–	–	10	pF
Output capacitance	C_{OUT}		–	–	–	
I/O capacitance	C_{IO}		–	–	–	

Table 18-11 Ring Oscillator Characteristics

(T_A = 0 °C to +70 °C, V_{DD} = 1.8 V to 3.6 V)

Parameter	Symbol	Conditions	Min.	Typ.	Max.	Unit
Ring oscillator	fring	Frequency	10.5	15	19.5	kHz
		Duty cycle	40	–	60	%
		Variation for mode change	–	–	1	%
		Current consumption	–	–	1	uA
		Start up time	–	–	500	us

Table 18-12 Oscillation Stabilization Time

(T_A = –25 °C to +85 °C, V_{DD} = 1.8 V to 3.6 V)

Oscillator	Test Condition	Min.	Typ.	Max.	Unit
Main crystal	f_{OSC} > 1 MHz	–	–	20	ms
Main ceramic	Oscillation stabilization occurs when the minimum oscillator voltage range is equal to 1.8 V.	–	–	10	ms
External clock (main system)	X_{IN} input High and Low width (t_{XH}, t_{XL})	25	–	500	ns
Oscillator stabilization wait time	t_{WAIT} when released by a reset (1)	–	$2^{16}/f_{OSC}$	–	ms
	t_{WAIT} when released by an interrupt (2)	–	–	–	ms

NOTE:

1. f_{OSC} is the oscillator frequency.
2. The duration of the oscillation stabilization time (t_{WAIT}) when it is released by an interrupt is determined by the setting in the basic timer control register, BTCON.

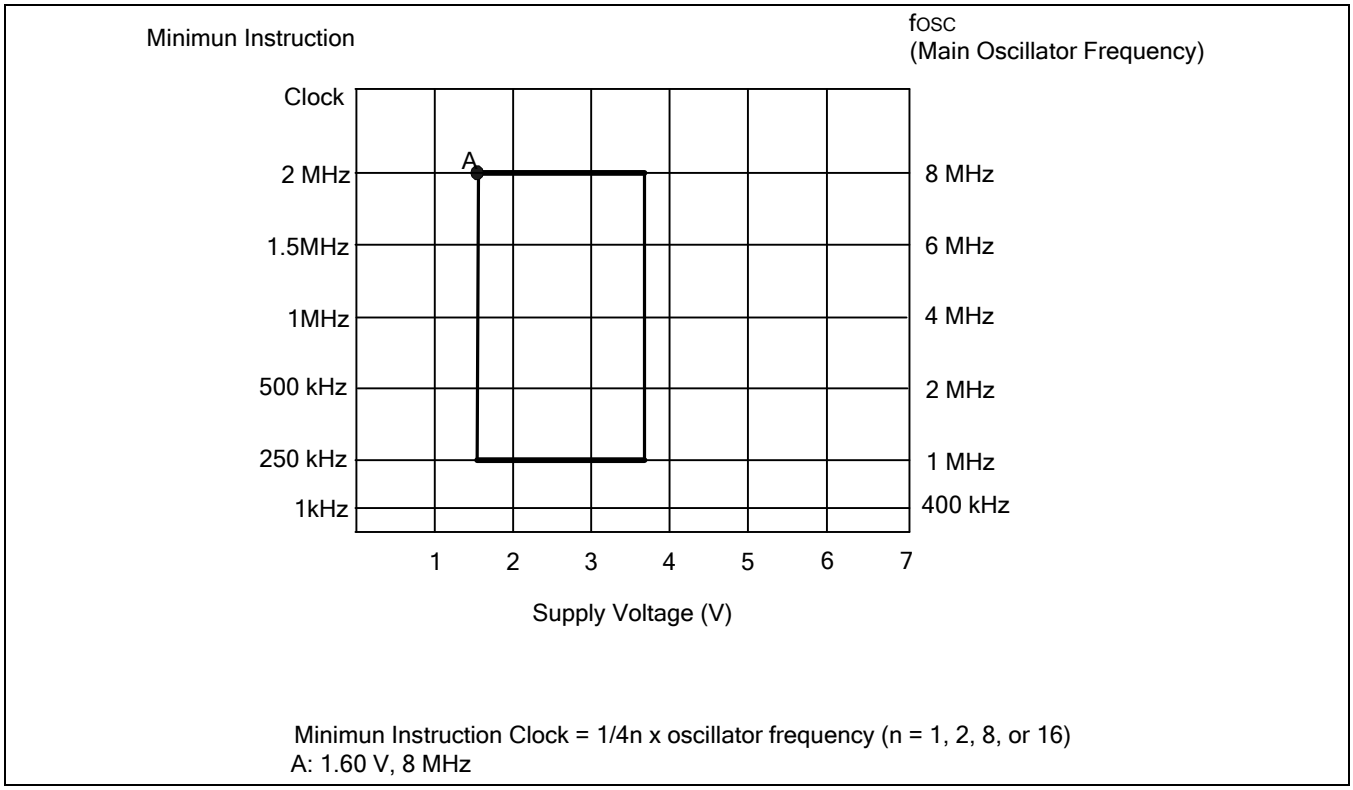

Figure 18-4 Operating Voltage Range of S3F80Q5

Table 18-13 AC Electrical Characteristics for Internal Flash ROM

(T_A = –25 °C to +85 °C)

Parameter	Symbol	Conditions	Min.	Typ.	Max.	Unit
Flash erase/write/read voltage	Fewrv	V_{DD}	1.60	3.3	3.6	V
Programming time (1)	Ftp	–	20	–	30	µS
Sector erasing time (2)	Ftp1		4	–	12	mS
Chip erasing time (3)	Ftp2		32	–	70	mS
Data access time	Ft_{RS}	V_{DD} = 2.0 V	–	250	–	nS
Number of writing/erasing	FNwe	–	10,000	–	–	Times
Data retention	Ftdr	–	10	–	–	Years

NOTE:

1. The programming time is the time during which one byte (8-bit) is programmed.
2. The Sector erasing time is the time during which all 128 bytes of one sector block is erased.
3. In the case of S3F80Q5, the chip erasing is available in Tool Program Mode only.

Table 18-14 ESD Characteristics

Parameter	Symbol	Conditions	Min.	Typ.	Max.	Unit
Electrostatic discharge	V_{ESD}	HBM	2000	–	–	V
		MM	200	–	–	V
		CDM	500	–	–	V

NOTE: If on board programming is needed, it is recommended that add a 0.1 µF capacitor between TEST pin and VSS for better noise immunity; otherwise, connect TEST pin to VSS directly.

Table 18-14 SPI Interface Transmit/Receive Timing Constants

(T_A =–25 °C to +85 °C, V_{DD} = 1.8 V to 3.6 V)

Parameter	Symbol	Conditions	Min.	Typ.	Max.	Unit
SPI	V_{ESD}	SPI MOSI Master Output Delay	–	–	5.6	ns
		SPI MOSI Slave Input Setup Time	0.5	–	–	
		SPI MOSI Slave Input Hold Time	0.5	–	–	
		SPI MISO Slave Output Delay Time	–	–	16	
		SPI MISO Master Input Setup Time	0.5	–	–	
		SPI MISO Master Input Hold Time	0.5	–	–	
		SPI nSS Master Output Delay	–	–	Tspiclk+0.3	
		SPI nSS Slave Input Setup Time	–	–	Tspiclk+0.3	

19 Mechanical Data

19.1 Overview

The S3F80Q5 micro-controller is currently available in a 24-pin ELP package.

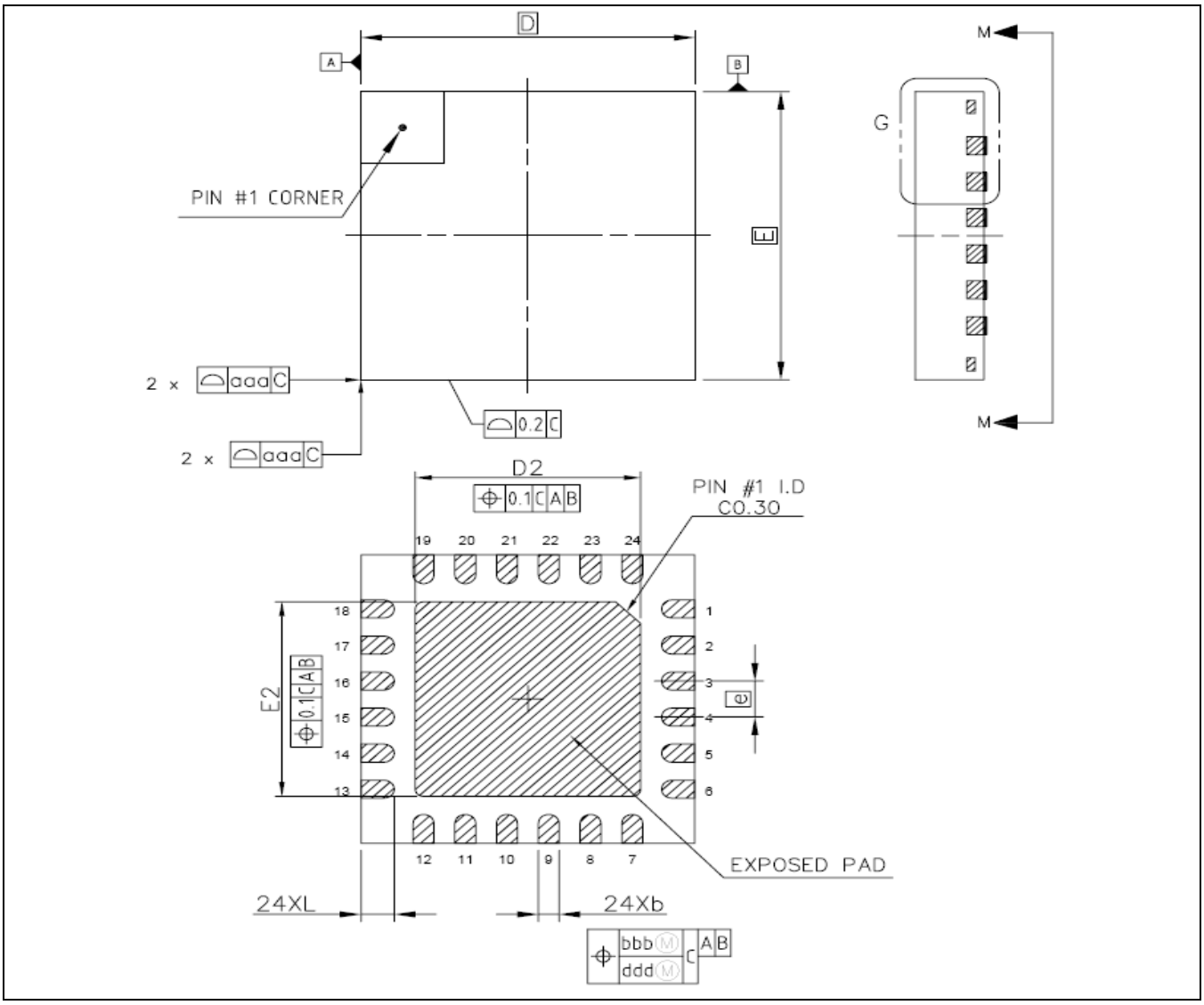

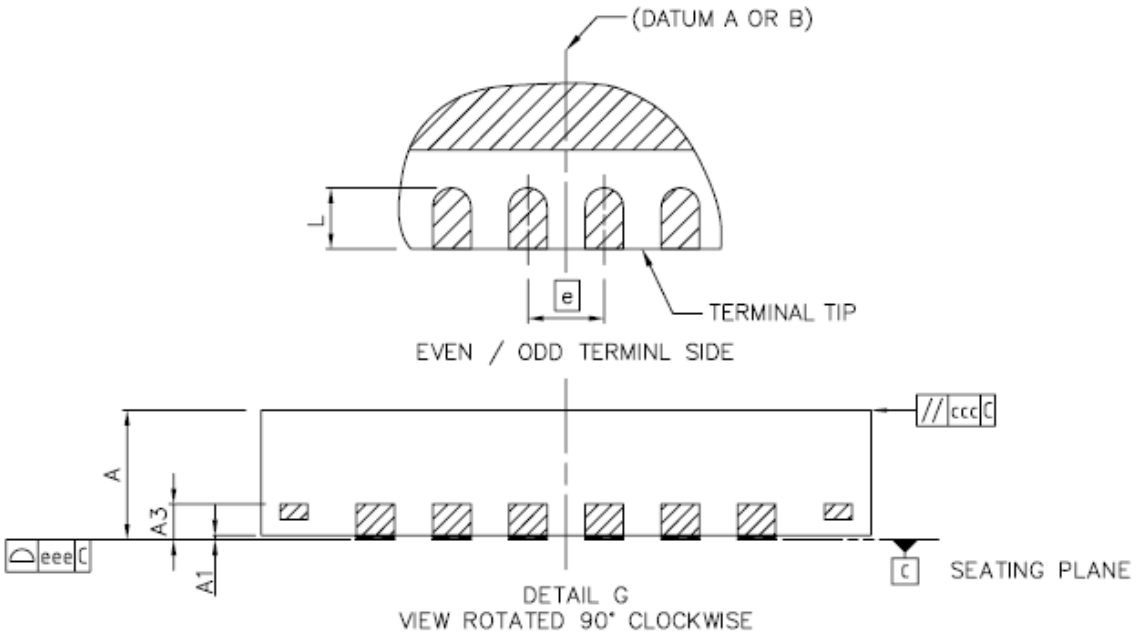

DIM	MIN	NOM	MAX
A	0.80	0.85	0.90
A1	0.00		0.05
A3		0.203 REF	
b	0.20	0.25	0.30
D		4.00 BSC	
E		4.00 BSC	
D2	2.60	2.70	2.80
E2	2.60	2.70	2.80
e		0.50 BSC	
L	0.35	0.40	0.45
aaa		0.10	
bbb		0.10	
ccc		0.10	
ddd		0.05	
eee		0.08	

NOTES

1.0 DIMENSIONING & TOLERANCEING CONFIRM TO ASME Y14.5M-1994.

2.0 ALL DIMENSIONS ARE IN MILLIMETERS. ANGLES ARE IN DEGREES.

3.0 DIMENSION b APPLIES TO METALLIZED TERMINAL AND IS MEASURED BETWEEN 0.25mm AND 0.30mm FROM TERMINAL TIP. DIMENSION L1 REPRESENTS TERMINAL FULL BACK FROM PACKAGE EDGE UP TO 0.1mm IS ACCEPTABLE.

4.0 COPLANARITY APPLIES TO THE EXPOSED HEAT SLUG AS WELL AS THE TERMINAL.

5.0 RADIUS ON TERMINAL IS OPTIONAL.

UNIT	DIMENSION AND TOLERANCE	REFERENCE DOCUMENT

Figure 19-1 24-Pin ELP Package Mechanical Data

20 S3F80Q5 Flash MCU

20.1 Overview

The S3F80Q5 single-chip CMOS microcontroller is the Flash MCU. It has an on-chip Flash MCU ROM. The Flash ROM is accessed by serial data format.

NOTE: This chapter is about the Tool Program Mode of Flash MCU. If you want to know the User Program Mode, refer to Chapter 14 Embedded Flash Memory Interface.

20.2 Pin Assignment

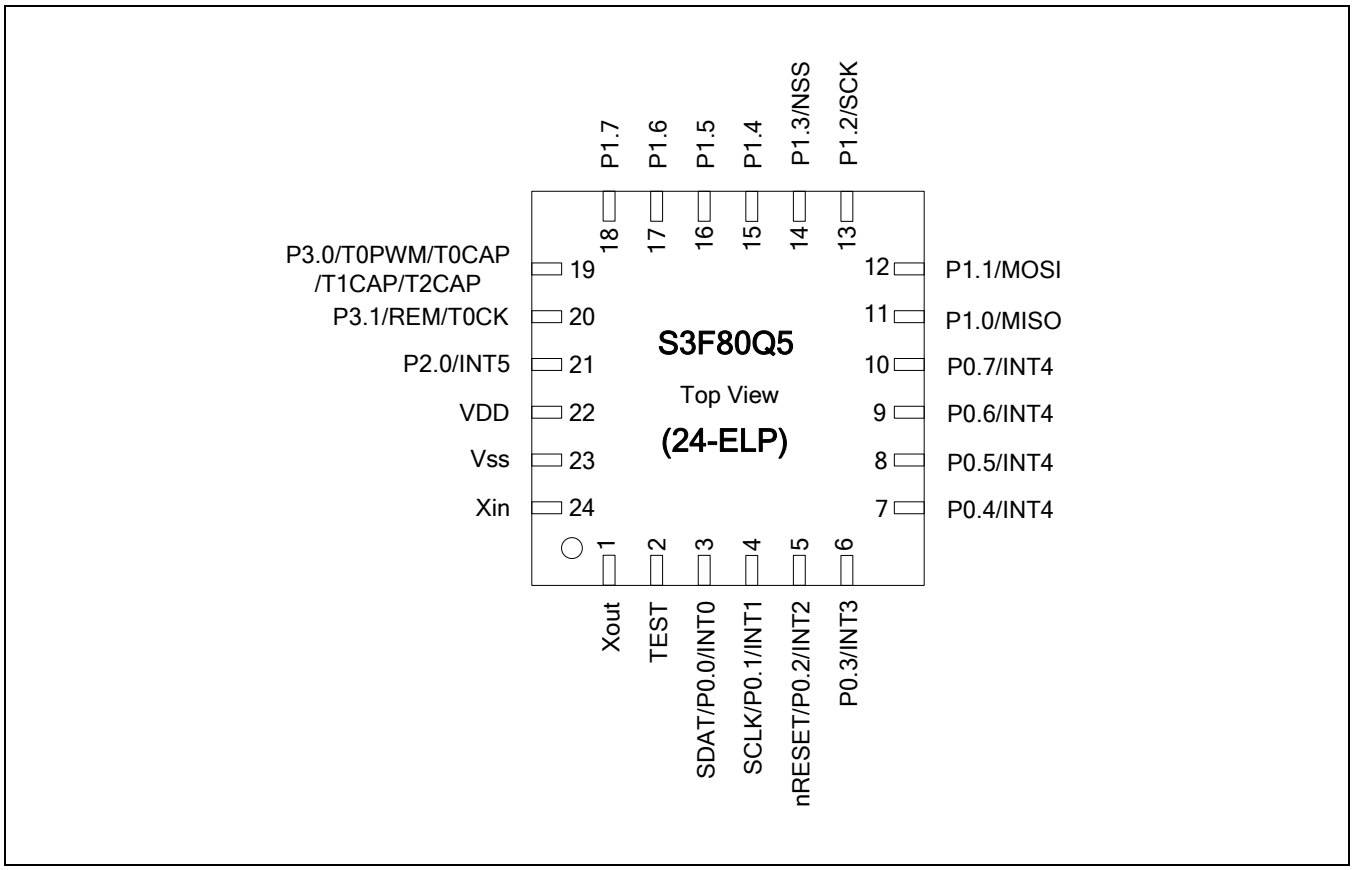

Figure 20-1 Pin Assignment Diagram (24-Pin ELP Package)

Table 20-1 Descriptions of Pins Used to Read/Write the Flash ROM

Main Chip	During Programming			
Pin Name	**Pin Name**	**Pin No.**	**I/O**	**Function**
P0.0	SDAT	5	I/O	Serial data pin. Output port when reading and input port when writing. Can be assigned as a Input/push-pull output port.
P0.1	SCLK	6	I	Serial clock pin. Input only pin.
TEST	TEST	4	I	Tool mode selection when TEST pin sets Logic value "1". If user uses the Flash writer tool mode (ex.spw2+ etc.), user should connect TEST pin to V_{DD}. (S3F80Q5 supplies high voltage 12.5 V by internal high voltage generation circuit.)
nRESET	nRESET	7	I	Chip Initialization
V_{DD}, V_{SS}	V_{DD}, V_{SS}	24 1	–	Power supply pin for logic circuit. VDD should be tied to + 3.3 V during programming.

Test Pin Voltage

The TEST pin on socket board for OTP/MTP writer must be connected to V_{DD} (3.3 V). The TEST pin on socket board must not be connected V_{PP} (12.5 V) which is generated from OTP/MTP Writer. So the specific socket board for S3F80Q5 must be used, when writing or erasing using OTP/MTP writer.

20.2.1 Operating Mode Characteristics

When 3.3 V is supplied to the TEST pin of the S3F80Q5, the Flash ROM programming mode is entered. The operating mode (read, write, or read protection) is selected according to the input signals to the pins listed in *Table 20-2* below.

Table 20-2 Operating Mode Selection Criteria

V_{DD}	TEST	REG/nMEM	Address (A15-A0)	R/W	Mode
3.3 V	3.3 V	0	0000H	1	Flash ROM read
	3.3 V	0	0000H	0	Flash ROM program
	3.3 V	1	0E3FH	0	Flash ROM read protection

NOTE: 0: Means Low level
1: Means High level

21 Development Tools

21.1 Overview

Zilog provides a powerful and easy-to-use development support system on a turnkey basis. This development support system is composed of a host system, debugging tools, and supporting software. Any standard computer running Windows 7 (32-/64-bit), Windows Vista (32-/64-bit), and Windows XP operating systems can be used as a host.

A sophisticated debugging tool is provided in both hardware and software formats: the powerful OPENice-i500/i2000 in-circuit emulator and the SK-1200 SmartKit. Zilog also offers supporting software that includes a debugger, an assembler, and a program for setting options.

21.1.1 Target Boards

Target boards are available for all the S3C8/S3F8-series microcontrollers. All the required target system cables and adapters are included on the device-specific target board. TB80Q0 is a specific target board for the development of application systems using S3F80Q5.

21.1.2 Programming Socket Adapter

When you program S3F80Q5's Flash memory by using an emulator or OTP/MTP writer, you need a specific programming socket adapter for S3F80Q5.

21.1.3 Development System Configuration

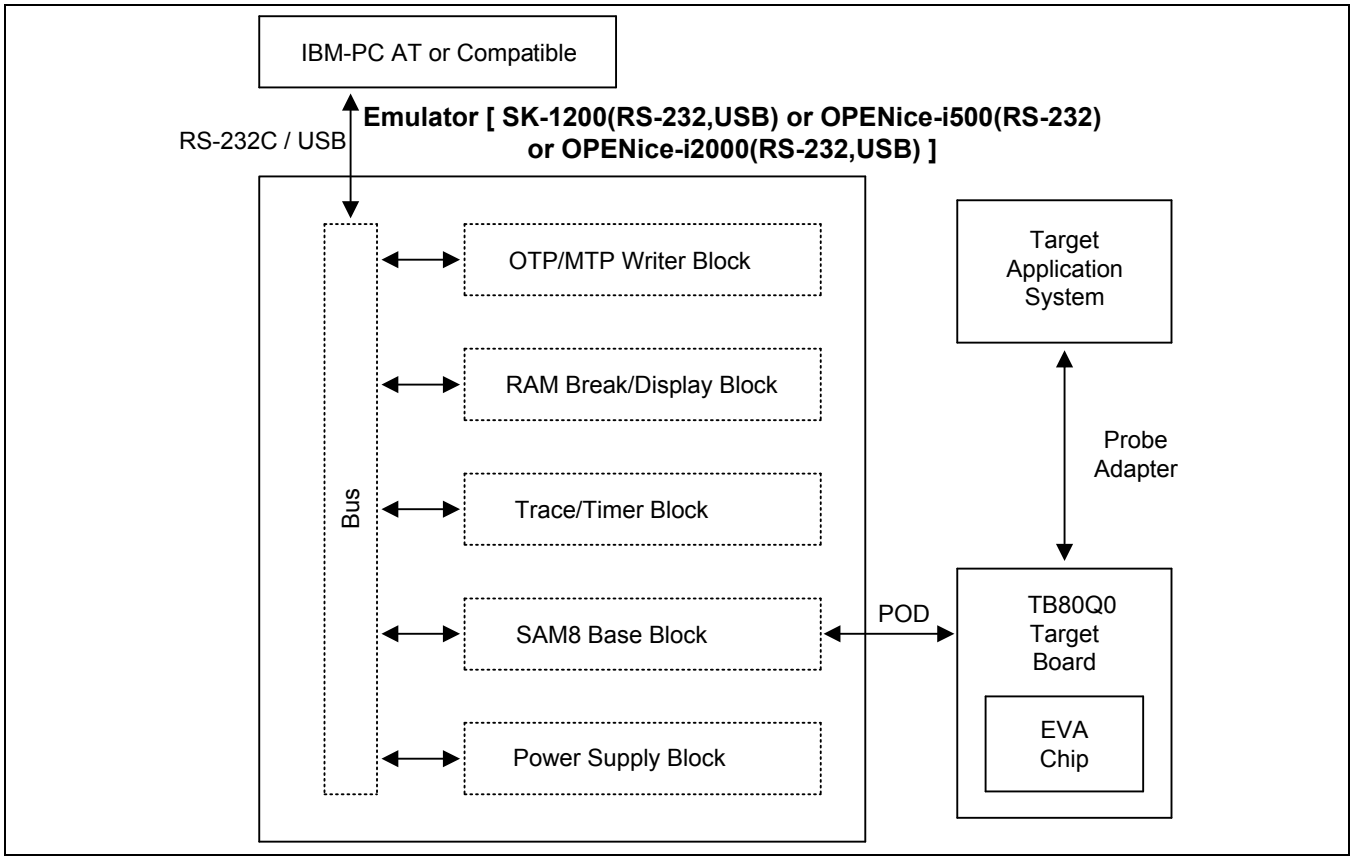

Figure 21-1 Development System Configuration

21.1.3.1 TB80Q0 Target Board

The TB80Q0 target board can be used for development of S3F80Q5.

The TB80Q0 target board is operated as target CPU with Emulator (SK-1200, OPENIce I-500)

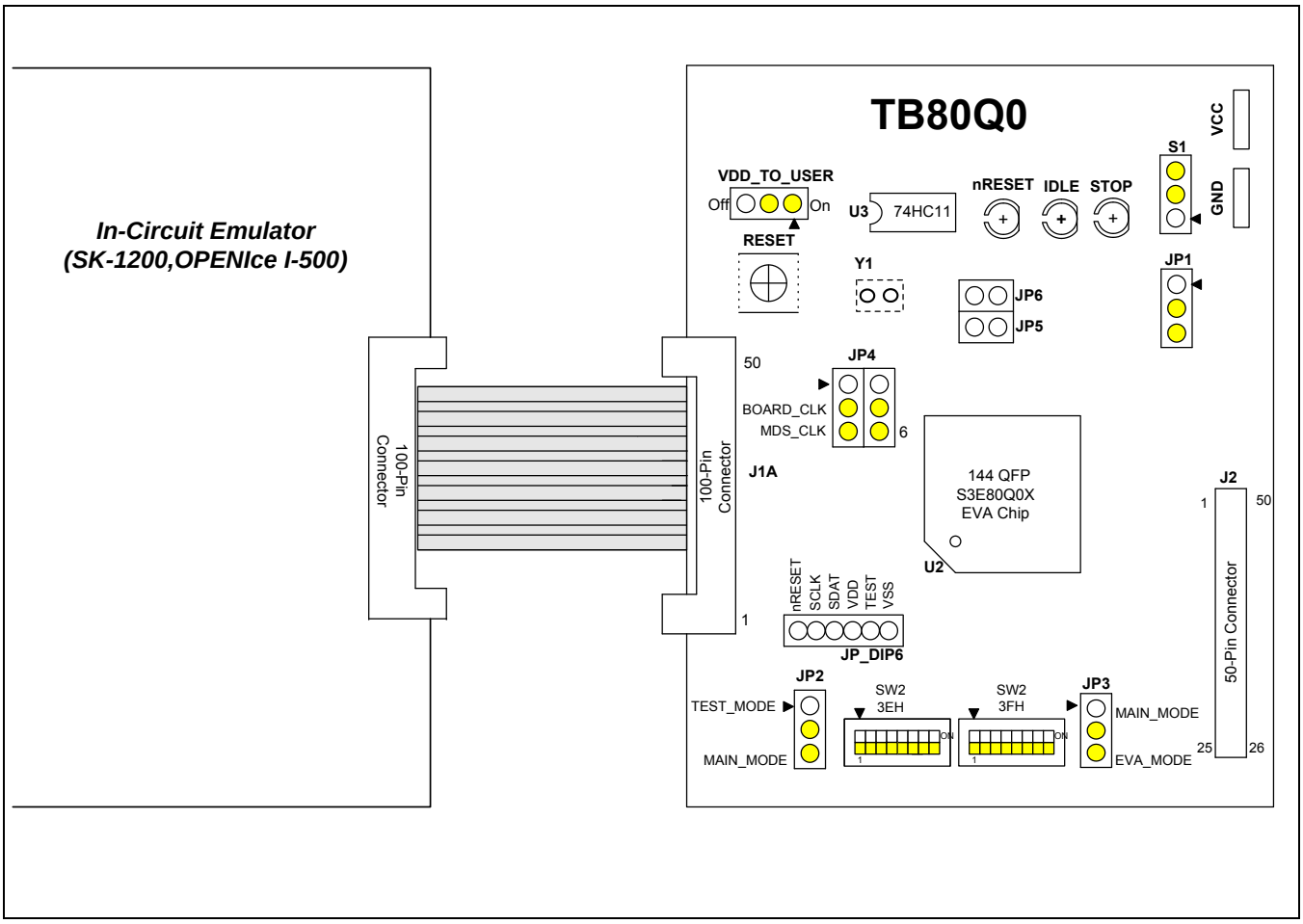

Figure 21-2 TB80Q0 Target Board Configuration

NOTE:

1. TB80Q0 should be supplied 3.3 V normally. So the power supply from Emulator should be set 3.3 V for the target board operation. If the power supply from Emulator is set to 5 V, you should activate 3.3 V regulator on the TB80Q0 by setting the related jumpers; (see *Figure 21-2*).
2. The symbol "◄" marks start point of jumper signals.

- Table 21-1 Setting of the Jumper in TB80Q0

JP#	Description	1-2 Connection	2-3 Connection	Default Setting
S1 (POWER_SELECTION)	Target board power source	Use External VDD	Use Emulator VDD	Join 2-3
JP1 (IVC_POWER)	IVC power selection	Use 1.8V regulator	Use VDDMCU	Not connect
JP2	Operation Mode	H: Test-Mode	L: Main-Mode	Join 2-3
JP3	Target board mode selection	H: Main-Mode	L: EVA-Mode	Join 2-3
JP4	Clock source selection	When using the internal clock source which is generated from Emulator, join connector 2-3 and 5-6 pin. If user wants to use the external clock source like a crystal, user should change the jumper setting from 1-2 to 4-5 and connect Y1 to an external clock source.		Emulator 2-3 5-6
JP5	ENIDLE signal connection	ENIDLE signal connection		Not connect
JP6	ENSTOP signal connection	ENSTOP signal connection		Not connect
JP7 (VDD_TO_USER)	Target System is supplied V_{DD}	Target Board supplied V_{DD} from user system	Target Board is not supplied V_{DD} from user system	ON setting
JP8, JP9	POWER connector	JP8: VCC JP9: GND		–
SW1	Smart Option at address 3EH	Dip switch for Smart Option. This 1 byte is mapped address 3EH for special function. Refer to page 2-3.		Not connect
SW2	Smart Option at address 3FH	Dip switch for Smart Option. This 1 byte is mapped address 3FH for special function. Refer to page 2-3.		Not connect
SW3	Generation low active reset signal to S3F80Q0 EVA-chip	Push switch		–
JP_DIP6	SPGM_PORT	SPGM_PORT		–

- **nRESET LED**
  This LED is OFF when the Reset switch is ON.
- **IDLE LED**
  This is LED is ON when the evaluation chip (S3E80Q0) is in idle mode.
- **STOP LED**
  This LED is ON when the evaluation chip (S3E80Q0) is in Stop Mode.

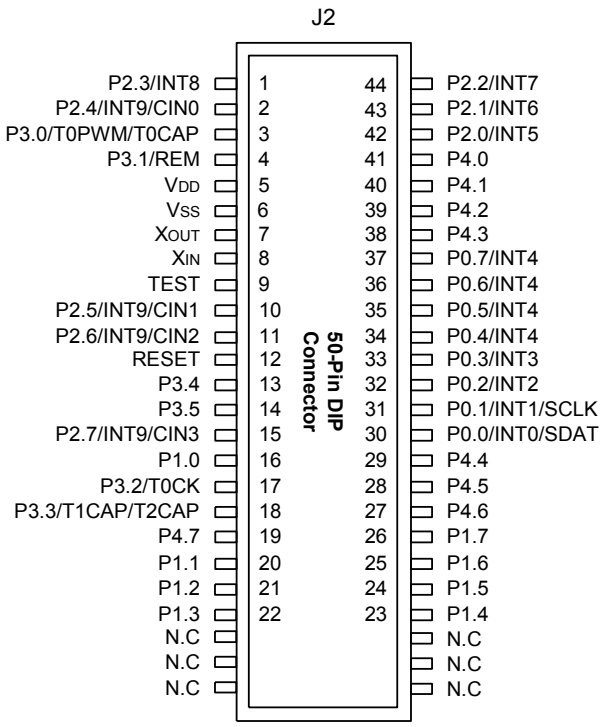

NOTE: N.C means No Connection.

Figure 21-3 50-Pin Connector Pin Assignment for User System

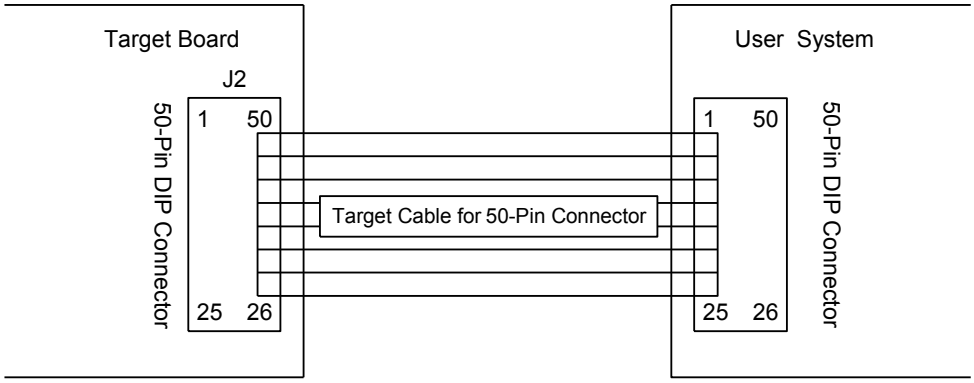

Figure 21-4 TB80Q0 Probe Adapter Cable

21.1.4 Third Parties for Development Tools

Zilog provides a complete line of development tools that support the S3 Family of Microcontrollers. With long experience in developing MCU systems, these third party firms are bonafide leaders in MCU development tool technology

21.1.5 In-Circuit Emulators

- OPENice-i500/2000
- SK-1200 SmartKit

21.1.6 OTP/MTP Programmers

- GW-Uni2
- AS-Pro2
- Elnec programmers

To obtain the S3 Family development tools that will satisfy your S3F80Q5 development objectives, contact your local Zilog Sales Office, or visit Zilog's Third Party Tools page to review our list of third party tool suppliers.